Viper®-ST

Solid Dielectric, Independent Pole Operated Reclosers

Providing electronic overcurrent protection for single or three phase operation on systems rated through 38kV, 800A continuous current, 12.5kA symmetrical interrupting

- Overhead, substation and dead-front padmount designs
- Operator safety with mechanical block and triple redundancy
- Smart Grid/Lazer® solutions
- Ease of installation with site-ready design
- Maintenance-free recloser
- Three internal current transformers
- Up to six internal voltage sensors
- Works directly with SEL-651R and Beckwith M-7679 controls
- RUS accepted

G&W Engineered to order. Built to last.

Catalog O-vst16

Viper-ST

Viper-ST, triple option, is an independent pole operation (IPO) recloser that combines the time-proven reliability of electronically controlled, vacuum fault interrupters with the maintenance-free benefits of a solid dielectric insulated device. The IPO feature offers user flexibility by permitting three distinct mechanical operating modes.

- 1 Ø trip / 1 Ø lockout
- 1 Ø trip / 3 Ø lockout
- 3 Ø trip / 3 Ø lockout

The Viper-ST provides overcurrent protection for systems through 38kV maximum, 800A continuous current and 12.5kA symmetrical interrupting.

Features

Reliable Performance - The Viper-ST recloser utilizes G&W's time-proven epoxy system to fully encapsulate the vacuum interrupter. This system provides excellent insulation while providing fully shielded, void-free construction. All modules are UV protected and 100% factory tested for partial discharge. The Viper-ST recloser utilizes the latest in magnetic actuator technology. The interrupter and actuator assembly has been tested for over 10,000 mechanical operations to assure a long operating life.

Operator Safety - The vacuum interrupter and all other energized parts are sealed within solid dielectric insulation. The body of the modules are fully grounded to provide a dead tank construction. This dead front concept provides optimum operator safety and additional protection to wildlife. A hookstick operable, manual trip and lockout handle prohibits operation from either the control or remotely. A mechanical blocking device, unique to G&W, further assures against accidental close. An open and closed contact indicator verifies contact position. Contact status and lockout condition can also be verified at the control.

Maintenance-free - Solid dielectric insulation provides a maintenance-free installation. Electronic equipment associated with the operation of the magnetic actuator(s) are located in the control.

Ease of Operation - The Viper-ST is compatible with the SEL-651R and Beckwith M-7679 controls with 32-pin and a 42-pin interfaces.

Ease of Installation - The Viper-ST is lightweight and compact. ***Site-ready*** designs provide all accessories including frames, arresters, Accusense voltage sensors, and voltage transformers preassembled prior to shipment significantly reducing installation time. All Viper-ST designs are system tested, including the site-ready units. One single control cable brings all current, voltage, breaker status and trip/close information into the control.

▲ *38kV Viper-ST recloser with a center mount frame.*

Application Flexibility - Units are designed for overhead, substation and padmount applications. Polemounted units can be equipped with either one horizontal and one vertical insulator or both horizontal insulators. Viper reclosers are designed with IEEE 386 interface apparatus bushings permitting the use of either silicone insulators for overhead applications or elbow connectors for padmount or riser applications. Removable silicone insulators are standard for overhead applications. This feature permits easy field replacement if an insulator is damaged. Higher external BIL rated insulators can also be used in high pollution areas and can be retrofitted on site if necessary. Silicone is the best hydrophobic material used in the industry. External, high accuracy Accusense voltage sensors and current transformers can also be used depending on application requirements.

Smart Grid/ Lazer® Automation Solutions - The Viper-ST is automation ready, simplifying conversion for any future automation requirements.

Complete Lazer automation packages are available offering a pre-engineered solution for applications requiring intelligent automatic switching and power restoration. The packages feature one or more protective relays, equipped with distribution and communication capabilities. Available communication devices include fiber optic transceivers, wireless radios or modems.

Dead-Line Operation

The unique design of the Viper-ST magnetic actuator system provides for local and remote operation of the recloser in the event that the AC source power is lost or interrupted. Dead-line operation allows the unit to operate through the battery located in the control.

Operation Principle

The Viper-ST recloser monitors the circuit using internal multi-ratio current transformers and voltage sensors. The unit is powered by an external 120 VAC or 48/125 VDC source. The Viper-ST is powered directly from the control, with no other external power required.

Recloser sequence operations, tripping and overcurrent sensing is an automatic function of the electronic control. Each phase module incorporates a magnetic actuator and drive assembly. Each magnetic actuator uses a permanent magnet to hold a solenoid plunger in the closed position while maintaining a charge on the opening spring. Trip/close operation is simply accomplished by energizing the trip coil which generates a magnetic flux in the opposite direction and releases the trip spring. The trip spring guarantees an open gap of the contacts inside the vacuum interrupter resulting in a fail-safe operation.

Manual Trip Operation

Operation of the hook-stick operable manual trip handle trips and locks out the recloser. Pulling the handle down trips and locks out the selected phase. A contact position indicator is provided indicating open or closed status of the contacts for each phase. Module contact status is also displayed at the control. Operation of the manual trip handle disables any local or remote closing operation until the handle is reset. A mechanical blocking device further assures against accidental close. The handle is operable from ground level. Once reset, the recloser can be closed using the control.

▲ *Manual trip handle*

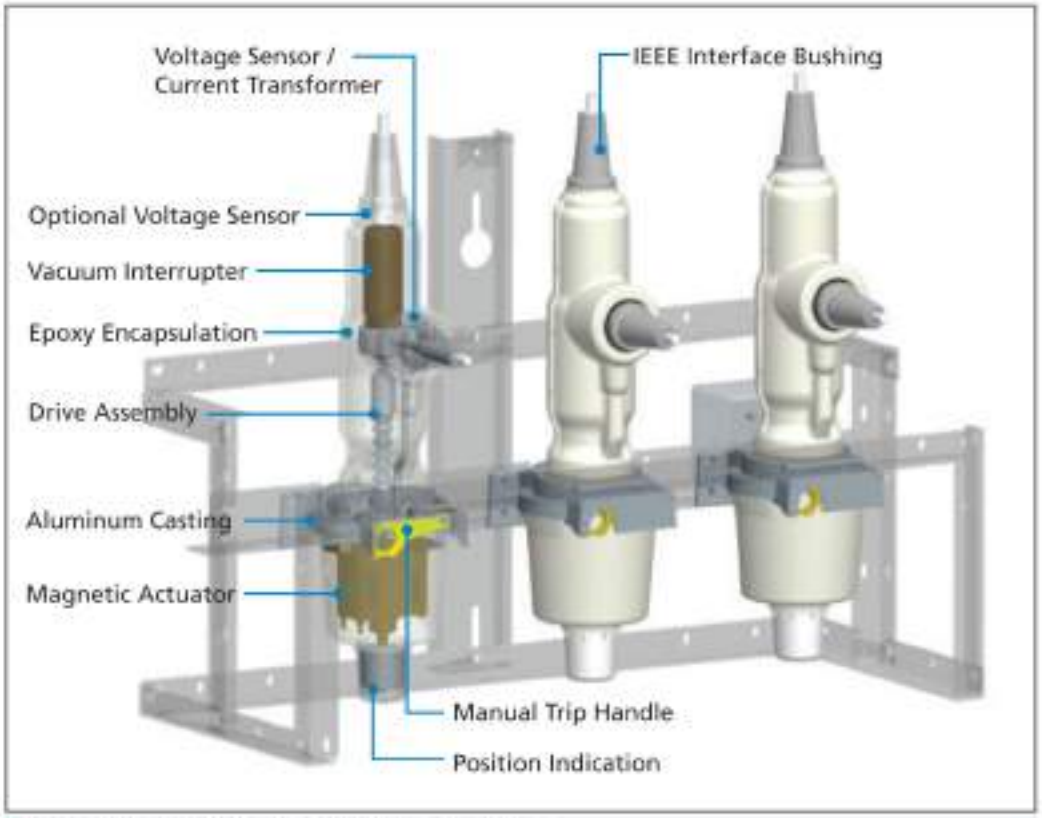

▲ *Isometric view of the Viper-ST without insulators.*

▲ *Silicone insulators are removable permitting easy replacement in the field if damaged or if higher external BIL level is required.*

Control Capabilities

The Viper-ST works directly with the SEL-651R controls and Beckwith M-7679. See the control manufactures product literature for further information.

Control Connections

A 1/4 turn twist lock style 32-pin connector makes the cable connection between the control and the interrupter control box. The cable provides the normal power supply to the magnetic actuator. The 32-pin interface control cable also brings down the CT and VS outputs to the control.

A standard 52a auxiliary contact for each phase comes with the 32-pin Amphenol connector. As an option, a 42-pin interface with a Harting connector is provided when an additional 52b auxiliary contact is requested. Both 52a and 52b are on the same Form C micro-switch. This 42-pin interface also offers a cable-disconnected alarm when the cable is unplugged or cut. The 42-pin interface option is only available with the SEL-651R and requires a different control part number.

Accusense Voltage Sensors

Accusense Voltage Sensors are a metering-class voltage sensing solution that enables users to collect critical voltage data needed for optimizing grid power delivery and reliability. Accusense voltage sensing technology eliminates the need for traditional voltage transformers and is available as a site-ready solution with the Viper-ST.

Accusense voltage sensors have been tested to IEC 60044-7 and IEEE C37.90-2005 and comply with accuracy class 0.5 (±0.5% Magnitude, ±0.344° Phase). They are rated to operate up to 27kV system voltages, 125kV BIL, -40°C to + 65°C temperature range, and output Low Energy Analog (LEA) signals (max 8VAC).

Solid Dielectric Modules

The Viper-ST modules are manufactured with an IEEE apparatus bushing interface. Removable silicone insulators are standard for all overhead applications. If higher external BIL ratings are required due to high altitude or local environmental conditions, higher rated insulators can be provided initially or retrofitted in the field by utility personnel. For dead-front, padmounted applications, 600A apparatus bushings or 200A deep well bushings (up to 27kV) are available.

- A 1000/500:1 dual ratio current transformer is encapsulated within each module. An optional 400/200:1 dual ratio CT option is also available for lower current detection.
- CT accuracy is +/-1%.
- Capacitive voltage sensors are encapsulated within each module and operate at Low Energy Analog (LEA) levels. The accuracy is +/-2% over the temperature range -20°C (-4°F) through +40°C (104°F) and +/-4% from -60°C (-76°F) through +65°C (149°F). The voltage sensing phase angle accuracy is +/-1° throughout the full temperature range.

▲ *SEL-651R front access control for conventional recloser applications.*

▲ *Beckwith M-7679 front access control for recloser applications.*

▲ *32-pin interface control cable with 1/4 twist lock connectors permit easy field installation.*

▲ *42-pin interface.*

▲ *Cabling from each recloser module is terminated inside a junction box permitting a single cable to go to the control. Cable entry can be using either strain relief or twist lock style connectors.*

▲ *Accusense voltage sensor.*

Polemount Center Frame (15kV drawing shown)*

Center Mount frames are available in aluminum as standard and galvanized or stainless steel as options. These frames acan be designed to incorporate Site-Ready accessories, such as potential transformers and lightning arrestors.

▲ *38kV center polemount Viper-ST*

▲ *Optional 3-phase ganged manual trip handle.*

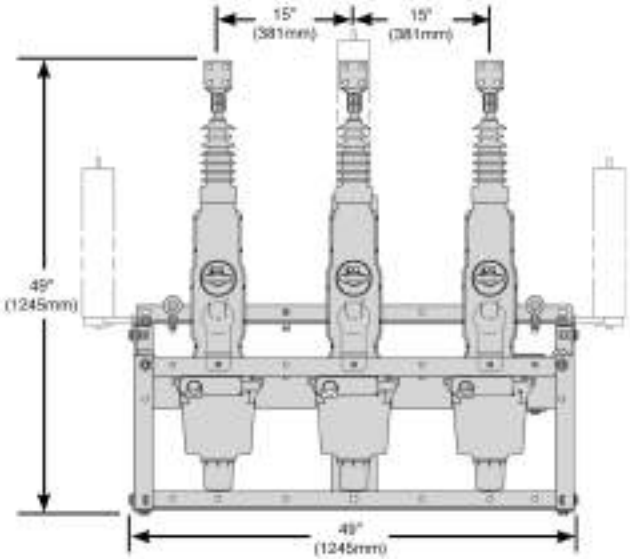

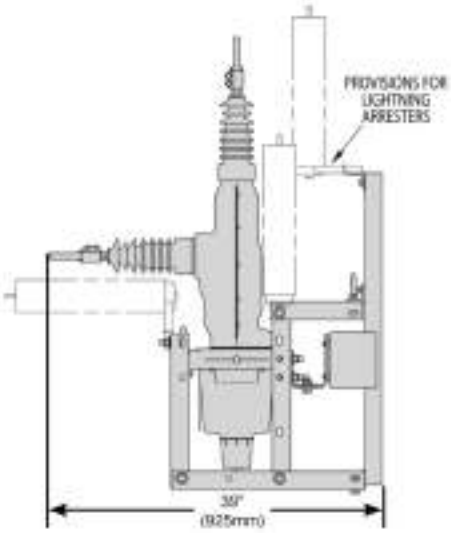

Full Site-Ready Alley-Arm with Two Oil PTs (15kV shown)*

Mounting frame can be mounted on either side of the Viper-ST to match overhead lines. Frame position can be changed on site without the need of special tools. Aluminum frame is standard and galvanized or stainless steel frames are options.

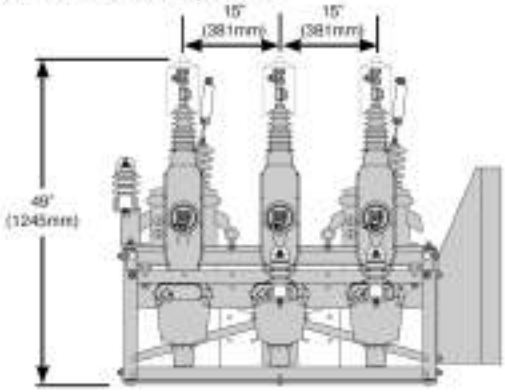

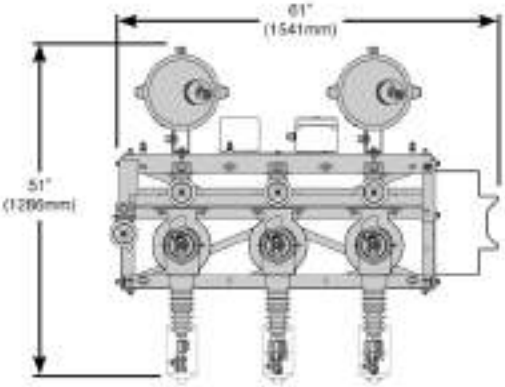

* Dimensions are approximate. Do not use for construction.

Polemount Site-Ready Assembly (15kV shown)*

Preassembly of all auxiliary equipment significantly reduces recloser preparation time for product installation in the field. Includes oil potential transformers or solid dielectric voltage transformers, arresters, aerial lugs, terminal/junction boxes, wildlife protectors and all associated wiring. Control cables are connectorized on both ends and cut to length for a cleaner installation. User identification markers can be pre-applied to each unit prior to shipment further reducing installation time. Aluminum frames are standard and galvanized and stainless steel frames are options.

Cross-Arm Frame (15kV shown)*

Phase B can be moved at site, without special tools, to either side of the pole to match the overhead lines. Shown as a site-ready unit. Aluminum frames are standard and galvanized and stainless steel frames are options.

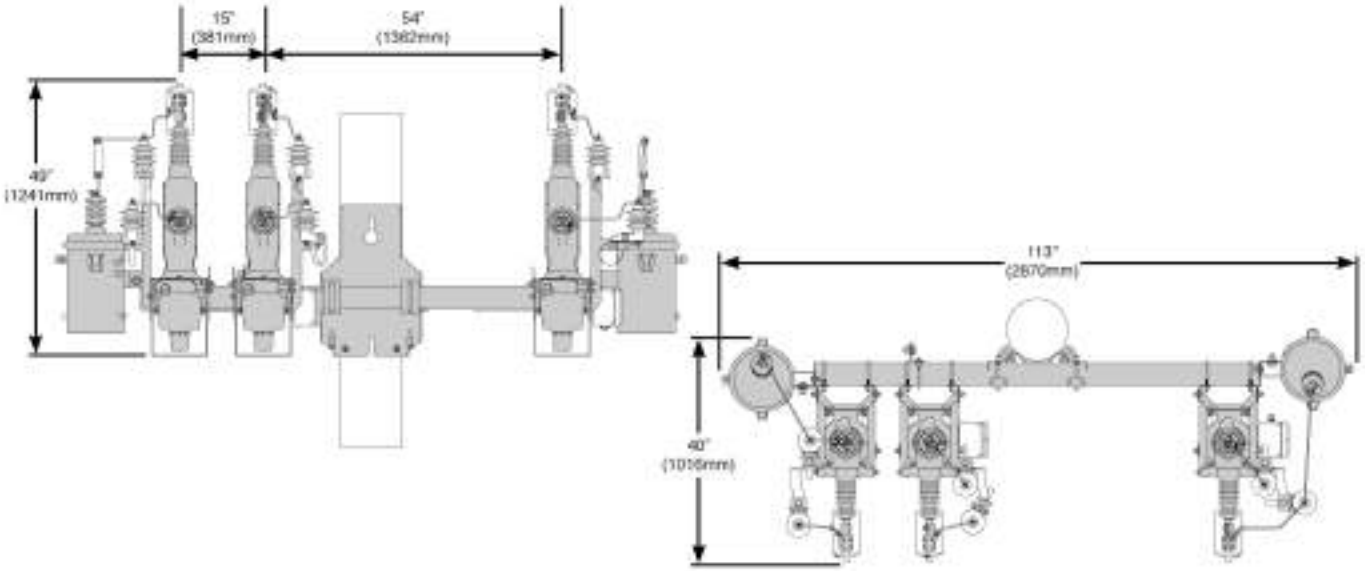

* Dimensions are approximate. Do not use for construction.

Polemount Cluster Mount Frame (15kV shown)*

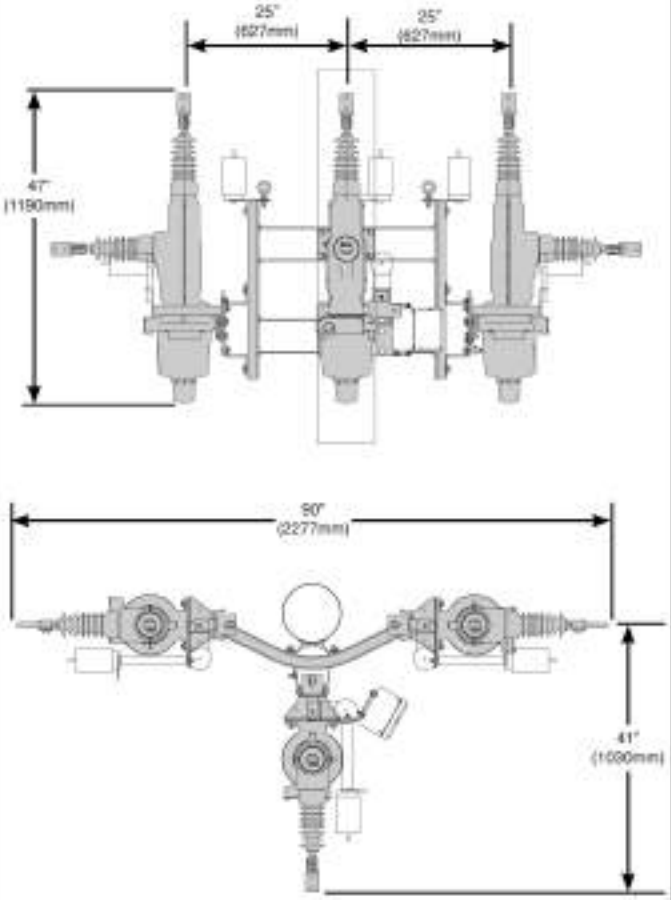

Horizontal Insulator Frames (38kV shown)*

This configuration is ideal for overhead applications where all three phase conductors are on the same side of the pole or for congested installations with minimal phase spacing. Galvanized steel frame is standard. Stainless steel is available.

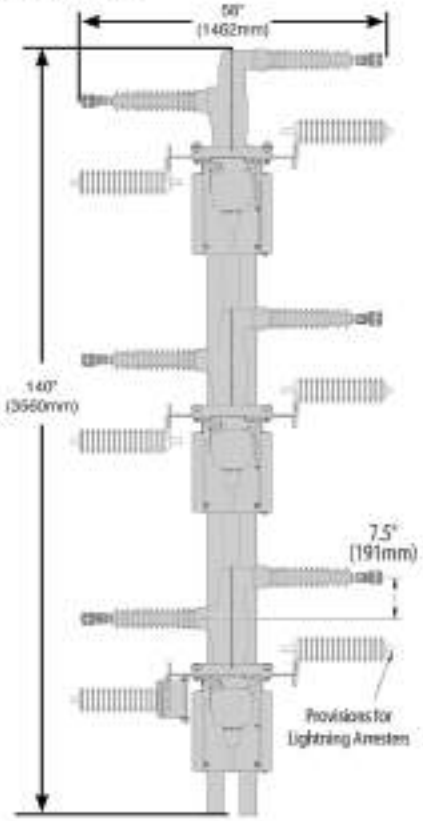

Viper-ST with Accusense (27kV shown)*

Center mount frame with factory installed Accusense voltage sensors and lightning arrestors. Additional Site-Ready options are available, such as potential transformers for control power. Aluminum frames are standard and galvanized and stainless steel frames are options.

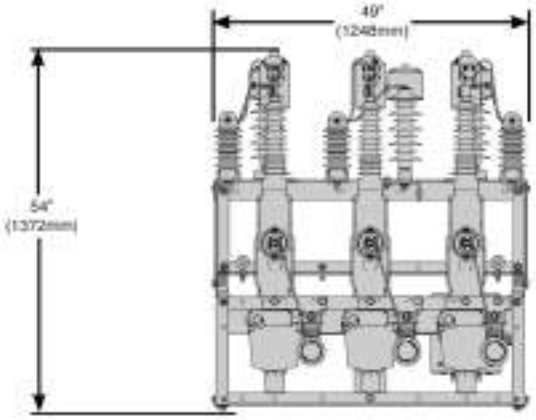

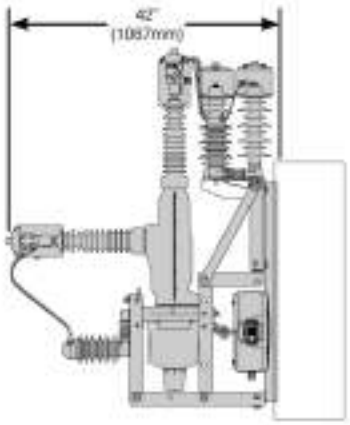

* Dimensions are approximate. Do not use for construction.

Substation Mount Recloser*

Frame is adjustable. Photo and drawings below show a three phase gang mounted unit. Galvanized is standard. Stainless steel is available as an option. The control cabinet can be mounted based on preference - on the front or sides of frames, or in the control house.

▲ *Viper-ST with one set of external CTs. A second set of CTs can be provided on the other side.*

Frames can be supplied for each individual module permitting customized substation configurations. See photo inset below.

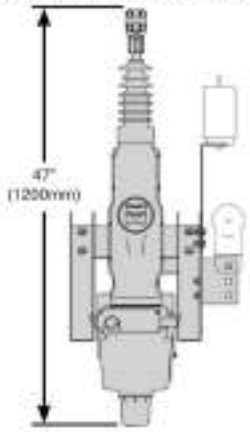

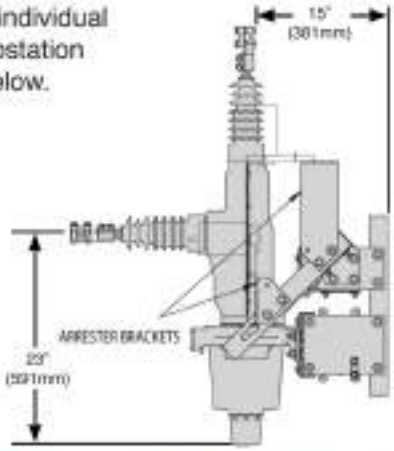

▲ *Retrofit installation with Z modules Viper-ST on individual frames*

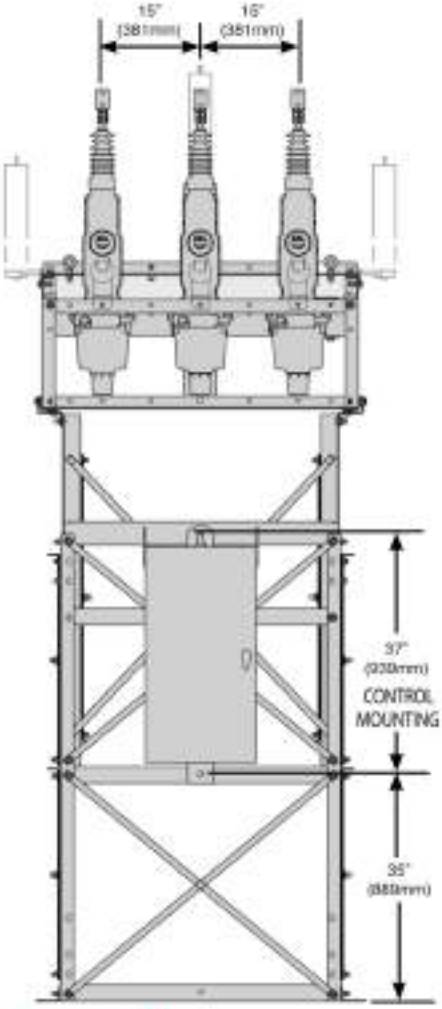

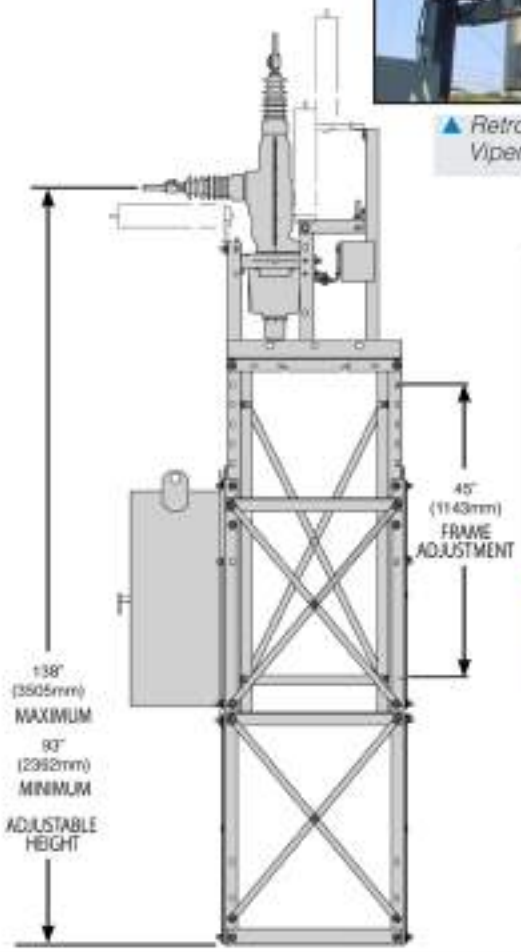

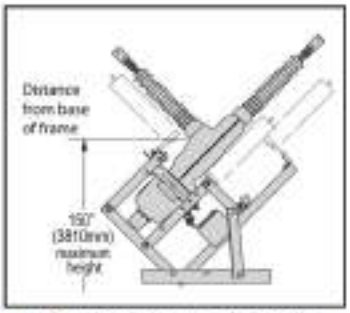

▲ *Drawing shows 45° angle mounting for applications requiring the same load and line side connector height.*

* Dimensions are approximate. Do not use for construction.

Padmount Applications

For applications where space is limited at the substation or where underground feeders require protection, Viper-ST solid dielectric reclosers can provide an ideal solution using a dead-front padmount design. The padmounted Viper-ST can be used as a breaker or as a tie-switch. Padmount applications can be considered for fenceless substations. In this configuration, the cable connections can be provided with either a standard IEEE 600A apparatus or 200A deepwell interface for elbow connectors. Separate compartments are provided for accessing the cables and operators. Controls can be mounted directly to the recloser frame or within a separate adjacent low voltage enclosure. Up to six internal LEA voltage sensors can be provided on padmounted designs with Z or C modules, perfect for tie points on FDIR schemes and automatic transfers.

Padmount Reclosers with Front only or Front / Back Access*

Galvanized steel enclosure is standard. Stainless steel is optional.

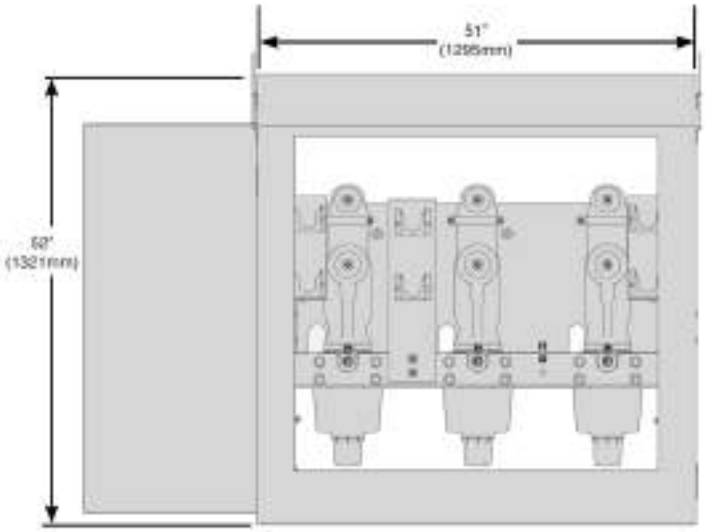

Module Configurations

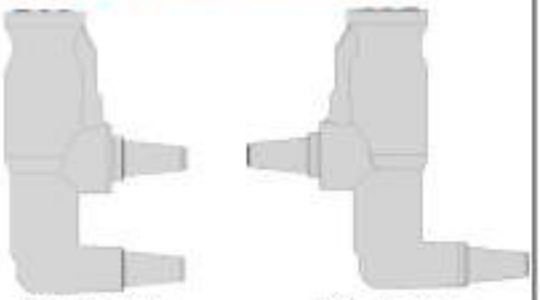

* Dimensions are approximate. Do not use for construction.

DESIGN RATINGS AND STANDARDS

Reclosers shall be designed, tested and built per IEEE C37.60 and IEC 62271-111 standards, latest version. Certified test reports shall be provided. The recloser shall be rated: (**select column**):

Voltage Class (kV)	15	25	35
Max System Voltage (kV)	15.5	29.3	38*
BIL (kV)	110	125	150
Continuous Current (A)	800A**	800A**	800
8 Hr. Overload, at 20° C	960	960	960
Interrupting Rating RMS (kA)	12.5	12.5	12.5
Making Current, RMS, asym, KA	20	20	20
Peak, asym (kA)	32	32	32
Short Circuit Current, kA sym	12.5	12.5	12.5
60Hz Withstand, kV rms Dry, 1 min	50	60	70
60Hz Withstand, kV rms Wet, 10 sec	45	50	60
Mechanical Operations	10K	10K	10K

*29.3kV system voltages are available

**Consult factory for higher continuous current up to 1000A.

CATALOG NUMBERS

Voltage Class	Catalog Number
15.5kV	VIP378ER-12-1-ST
27kV	VIP388ER-12-1-ST
38kV	VIP398ER-12-1-ST

Approximate weight (for a single phase module less frame) = 125lbs. (57kg)

◄ *NEMA 4-hole, 2-hole and clamp style aerial lugs.*

OPTIONS

The following options shall be supplied:
(Check as necessary)

___ NEMA 2-hole aerial lugs
___ NEMA 4-hole aerial lugs
___ Clamp style aerial lugs (#2- 500 kcmil)
___ Clamp style aerial lugs (250-750 kcmil)
___ 4/0 brass eyebolt ground lug
___ Galvanized polemount center frame with arrester provisions on the load and source side.
___ Stainless steel polemount center frame with arrester provisions on the load and source side.
___ Stainless steel polemount alley-arm frame with arrester provisions on the load and source side.
___ Stainless steel substation frame.
___ Polemount site-ready assembly
___ Lightning arresters
___ Dead-front padmounted design with stainless steel enclosure.
___ External Accusense Voltage Sensors (0.5 class accuracy)
___ External 1.0 KVA oil potential transformer (3% accuracy) for 120 VAC supply power with hardware to mount on standard aluminum frame
___ External 0.75 KVA solid dielectric voltage transformer (0.3% accuracy) for 120 VAC supply power with hardware to mount on standard aluminum frame
___ High impact, UV stable wildlife protectors for source and load insulators
___ External CTs for current monitoring
___ Six internal voltage sensors
___ Junction box with all twist lock connections
___ 42 pin interface with additional 52b auxiliary contact (Form C type) and cable-disconnected alarm
___ 3-phase ganged manual trip handle

Reclosers play a critical role in improving distribution reliability. By applying Viper-ST reclosers on the distribution system, permanent faults can be isolated to minimize outage areas and temporary faults can be cleared to restore power, thereby improving service continuity and system reliability.

The G&W Viper-ST can be used in a variety of applications including stand alone reclosers, complex loop schemes with sectionalizing and tie switches, replacements for circuit breakers for feeder protection, and distributed generation intertie switches. The Viper-ST recloser is a versatile solution for your over-current protection and distribution automation needs.

High accuracy Accusense voltage sensors integrated with the Viper-ST can be used as a tool to assist in improving power optimization initiatives such as volt-var optimization (VVO), conservation voltage reduction (CVR), and end of line metering. The Viper-ST solution with Accusense voltage sensors can serve as a metering point to provide data required for power factor adjustments, reducing voltages, optimizing voltages, and managing peak loads. External CT's can be installed over the Viper insulators for applications requiring high accuracy current measurement.

Stand Alone Recloser Application

Temporary Fault Between Viper and Load

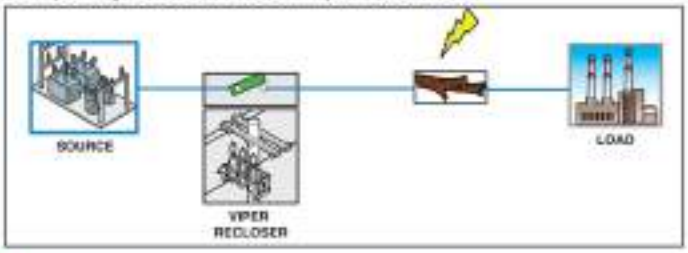

▲ *Figure 1: Stand Alone Viper Recloser trips on a fault*

1. A tree branch falls on line causing fault between Viper recloser and Load.
2. The Viper recloser begins reclose sequence sequence and trips open, as shown in Figure 1.

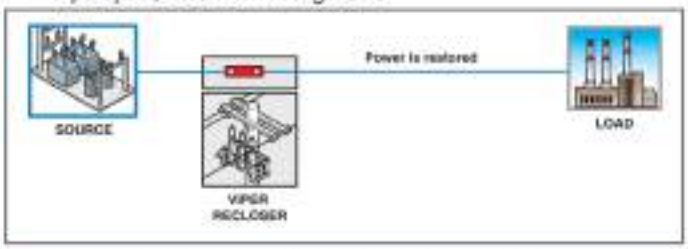

▲ *Figure 2: Stand Alone Recloser restored power after temporary fault cleared*

3. The tree branch falls, and the temporary fault clears.
4. The Viper recloser closes, as shown in Figure 2.

Loop Scheme Applications

Loop schemes generally consist of two or more sources tied into a distribution system to ensure backup power is available when the primary feeder is lost. The scheme utilizes sectionalizing and tie switches to automatically isolate the fault and restore power to all areas unaffected by the fault quickly and reliably.

Open Loop Viper-ST Application

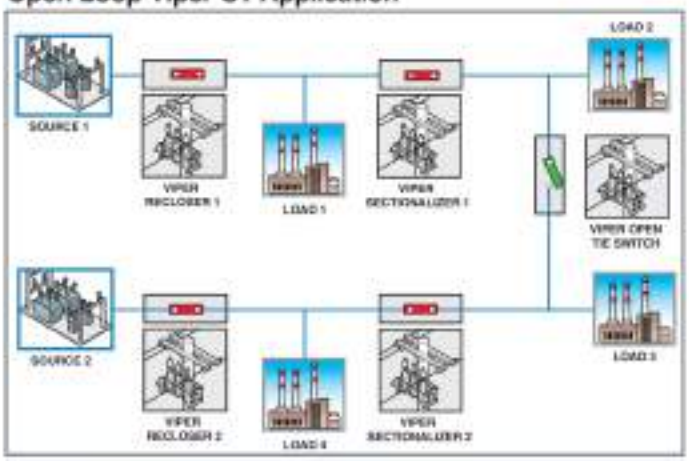

▲ *Figure 3: Open Loop Scheme Configuration*

Permanent Fault Between Recloser 1 and Sectionalizer 1

1. Viper Recloser 1 Trips open, operates through reclosing sequences and locks out
2. Viper Sectionalizer 1 opens after Viper Recloser 1 trips to lockout, isolating the fault. Power lost between tie switch and Viper Sectionalizer 1
3. The Viper Open Tie Switch closes
4. Power is restored to Load 2, as shown in Figure 4.
   Note: Custom relay programming may be required for Viper loop scheme applications.

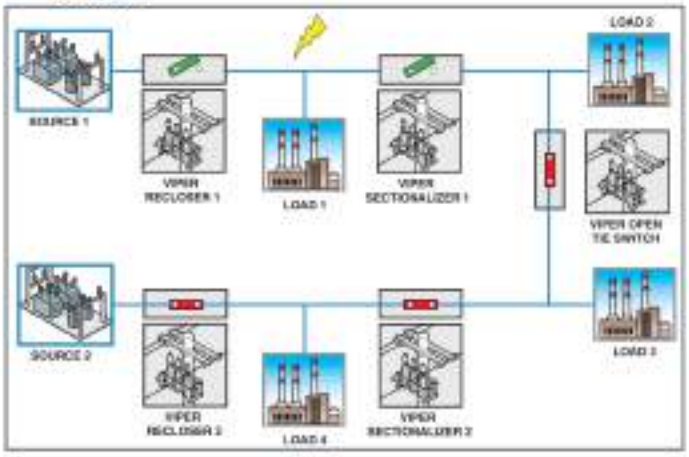

▲ *Figure 4: Open Loop Scheme with Fault Isolated*

Automatic Transfer

For critical load applications such as hospitals, processing plants, military bases, etc., automatic transfer schemes are common. For overhead systems, this scheme requires two switches, voltage sensors & current transformers, and a voltage-time controller. A loss of voltage on the primary source is sensed and initiates the controller to open the primary and close the alternate source switch to automatically restore power.

Lazer Automation

The distribution automation expertise and products of G&W have been combined to provide a state of the art solution – Lazer Automation. Various levels of Lazer Solutions are availablefor peer-to-peer product applications, stand-alone controller based systems and total system wide management and control.

G&W offers
Technical Support and Services:

Custom Engineering

Our engineers can tailor our products to meet the needs of any application.

Custom Programming

Our automation engineers can provide tailored relay programs to meet any specified needs.

Factory Acceptance Testing

G&W's Factory Acceptance Testing ensures customers' automation solutions are certified to operate properly and meet all requirements prior to being installed in the field.

Training Services

G&W offers a range of training solutions at both G&W facilities and on site.

24 Hour Technical Support

Technical support for G&W products is available 24 hours a day, 7 days a week.

G&W
Engineered to order. Built to last.

seijiro yazawa iwai

DIVISIÓN DE EQUIPOS E INFRAESTRUCTURA PARA SERVICIOS DE ENERGÍA ELÉCTRICA

www.seijiroyazawaiwai.com
info@seijiroyazawaiwai.com