ORGANIC RANKINE CYCLE TECHNOLOGY

clean energy ahead®
TURBODEN

a group company of MITSUBISHI HEAVY INDUSTRIES, LTD.

Turboden – a Mitsubishi Heavy Industries Company

About Us

Turboden – The ORC Technology Made in Italy

Turboden is an Italian company and a global leader in the design, manufacture and service of Organic Rankine Cycle (ORC) turbogenerators, which harness heat to generate electric and thermal power from renewable sources, including biomass, solar, geothermal energy and waste heat from industrial processes, engines or gas turbines, suitable for distributed generation.

The company was founded in 1980 in Milan by Mario Gaia, Professor of Energy at the *Politecnico di Milano* and today Managing Director of Turboden. Prof. Mario Gaia implemented his vision for ORC technology by using organic fluids, instead of water, in a closed thermodynamic cycle. Moreover, his close connection with the university has always ensured the recruitment of highly qualified R&D personnel.

In the Eighties and Nineties, Turboden developed research projects in solar, geothermal and heat recovery applications and designed its first commercial units for the Swiss and Austrian markets.
At the end of the Nineties, Turboden started installing the first biomass ORC unit in Switzerland and after that the great diffusion of its ORC units began first in the German market and then all around Europe.

Turboden has always had a single mission: to design ORC turbogenerators for the generation of electric power and heat from renewable sources and from heat recovery, while constantly striving to implement ORC technical solutions.

In 2013 Turboden's Quality Management System gets certified to ISO 9001:2008.

LLOYD'S REGISTER • LRQA
ISO 9001

Mitsubishi Heavy industries

Mitsubishi Heavy Industries is one of the world's leading heavy machinery manufacturers, with consolidated sales of over $32 billion (in fiscal 2013).
MHI's products and services encompass shipbuilding, power plants, chemical plants, environmental equipment, steel structures, industrial and general machinery, aircraft, space systems and air-conditioning systems.

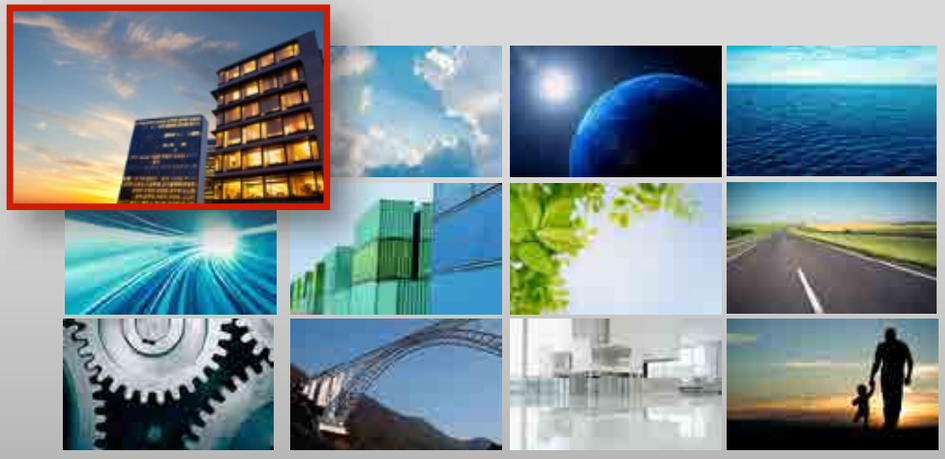

Energy
Aircraft
Space
Ship & Ocean
Transportation
Material Handling
Environment
Automotive
Industrial Machinery
Infrastructure
Living & Leisure
Defense

The company helps increasing general awareness of energy efficiency, therefore contributing to energy savings and efficiency as established by European guidelines and current international protocols.

In 2009, Turboden became part of UTC Corp., a worldwide leader in development, production and service for aero engines, aerospace drive systems and power generation gas turbines, to develop ORC solutions from renewable sources and waste heat worldwide.

In 2013 UTC exits the power market forming strategic alliance with Mitsubishi Heavy Industries.

In 2013 Mitsubishi Heavy Industries acquires from UTC Pratt & Whitney Power Systems (now PW Power Systems, Inc.) and the affiliate Turboden.
Today Turboden s.r.l. and PW Power Systems, Inc. are MHI group companies to provide a wider range of products and services for thermal power generation systems.

Today Turboden keeps headquarters and production branch in Italy and the Italian quotaholders stay in charge of management.

Turboden – a Mitsubishi Heavy Industries Company

ORC Technology & Applications

ORC Technology

ORC technology is similar to a traditional steam turbine, but with a single, important difference. Instead of using water vapor, the ORC system vaporizes a high-molecular-mass organic fluid, resulting in excellent electric performance and several key advantages: slower turbine rotation, lower pressure and no erosion of metallic parts and blades.
The ORC unit is preassembled onto one or more skids and can be easily transported.
The ORC turbogenerator uses medium-to-high-temperature thermal oil to preheat and vaporize a suitable organic working fluid in the evaporator (7>3>4). The organic fluid vapor rotates the turbine (4>5), which is directly coupled to the electric generator, resulting in clean, reliable electric power.
The exhaust vapor flows through the regenerator (5>8), where it heats the organic liquid (2>7) and is then condensed in the condenser and cooled by the cooling circuit (8>6>1). The organic working fluid is then pumped (1>2) into the regenerator and evaporator, thus completing the closed-cycle operation.

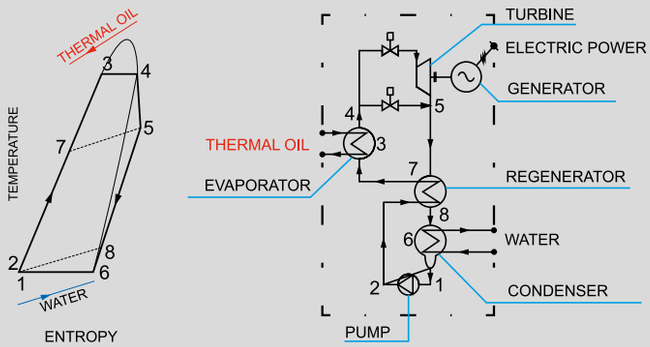

Why a high-molecular-mass working fluid instead of water?

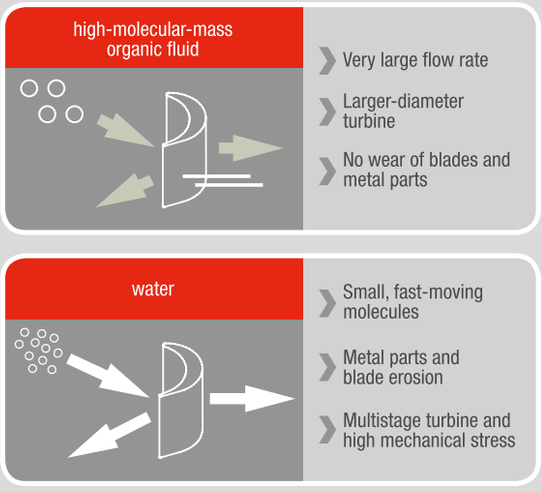

Advantages of Turboden ORC Turbogenerators

Technical Advantages

- High cycle efficiency
- Very high turbine efficiency
- Low turbine mechanical stress due to low peripheral speed
- Low turbine RPM, allowing the direct drive of the electric generator without gear reduction in many applications
- No erosion of blades, thanks to the absence of moisture in the vapor nozzles
- No water consumed

Operational Advantages

- Simple start-stop procedures
- Automatic and continuous operation
- No operator attendance needed
- Quiet operation
- High availability (typically 98%)
- Partial load operation down to 10% of nominal power
- High efficiency at partial load
- Lower maintenance cost
- Long life

ORC Technology & Applications

ORC Applications

We design, produce, install and maintain Organic Rankine Cycle (ORC) turbogenerators, for the combined generation of electric power and heat, employing renewable resources and heat recovery from industrial processes, engines and gas turbines, particularly well-suited for distributed generation. The power of Turboden units generally ranges from 200 kW up to 15 MW per single unit.

Biomass
Turboden ORC units for cogenerative purposes allow the simple and highly efficient generation of electric power and heat from biomass.

Geothermal
Turboden ORC units can produce electricity from geothermal resources with medium-to-low-temperatures, generally ranging between 100 °C and 200 °C (212 °F and 392 °F).

Heat Recovery
Turboden ORC units can produce electricity by recovering heat from industrial processes and combined cycles.

Waste to Energy
Turboden ORC units can produce electricity from waste to energy recovery processes.

Solar Thermal Power
Turboden ORC units allow the conversion of heat harnessed by solar collectors into electricity through an efficient thermodynamic cycle.

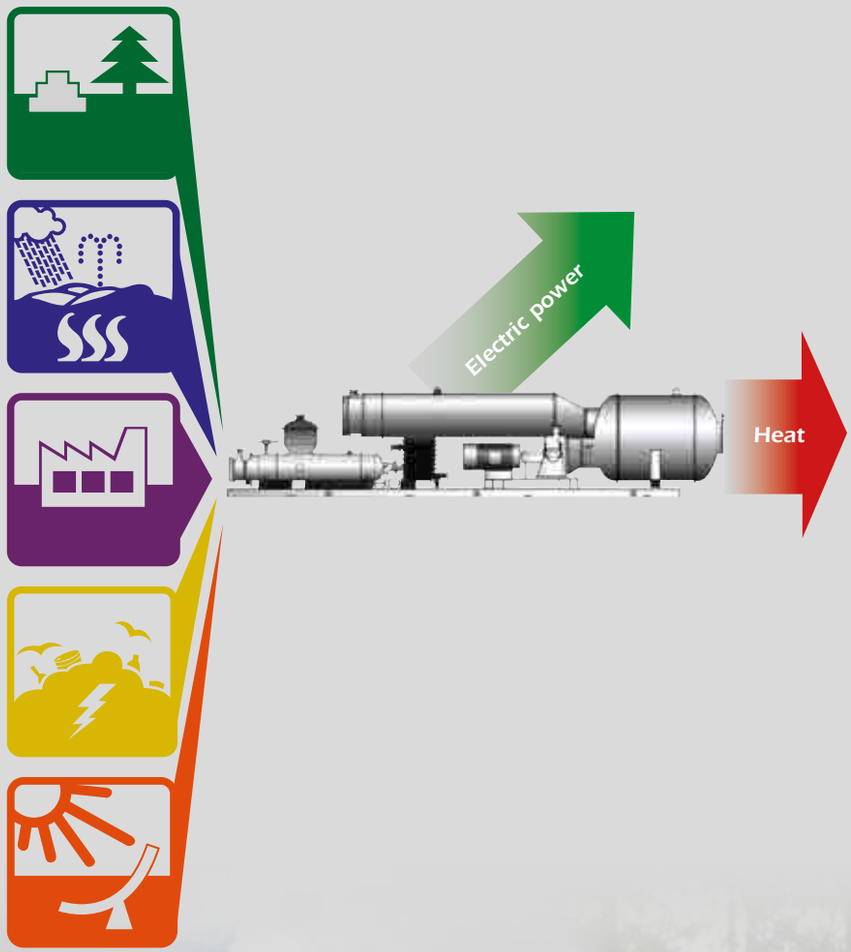

ORC Main Components

> *Even with variable flow rates or slight fluctuations in temperature, the ORC continues to operate down to 10% of nominal power. This is a significant advantage over steam turbines.*

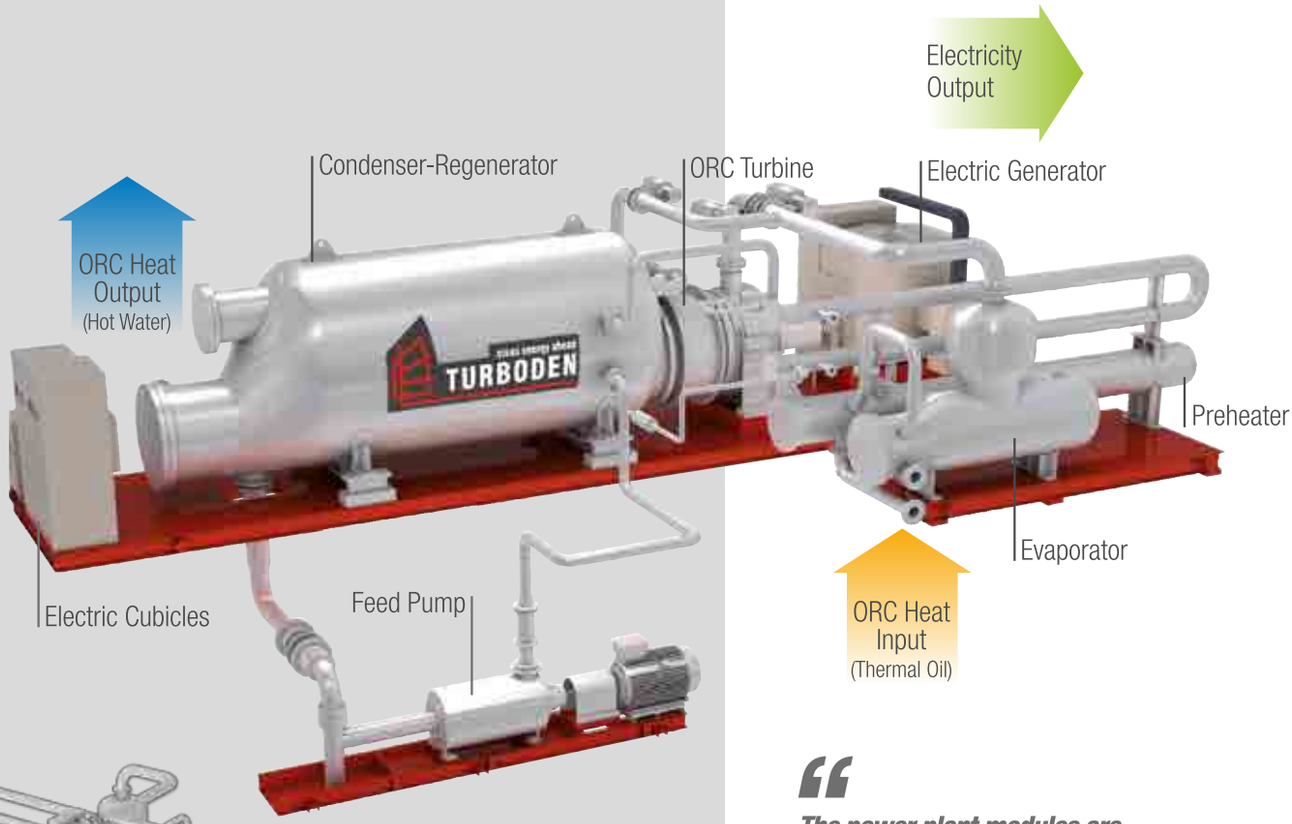

> *The power plant modules are preassembled and prequalified to facilitate ease of installation and startup. Each contains standardized components designed and integrated according to proven processes to ensure high quality.*

clean energy ahead
TURBODEN
a group company of MITSUBISHI HEAVY INDUSTRIES, LTD.

Available ORC Models

ORC products are configured for either electricity-only applications where heat sources are captured to produce electric power or combined heat and power (CHP) applications that produce both electricity and hot water for use as space or industrial process heating.

HRS: Electric-Only, High-Efficiency Units
HR: Electric-Only, Standard-Efficiency Units
CHP: Combined Heat & Power Units

ORC Partial Load Efficiency

Part load operation down to 10% of nominal load.
Maintains 90% of the cycle efficiency down to 50% loading.

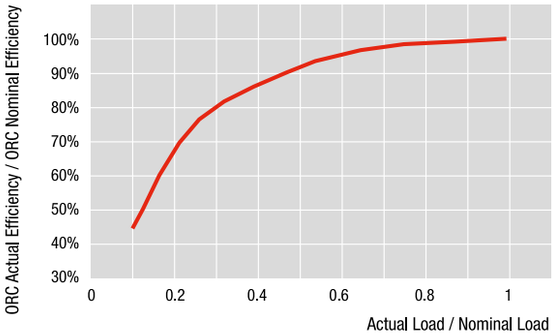

Cooling Water Temperature Effect on Cycle Efficiency (HRS Model)

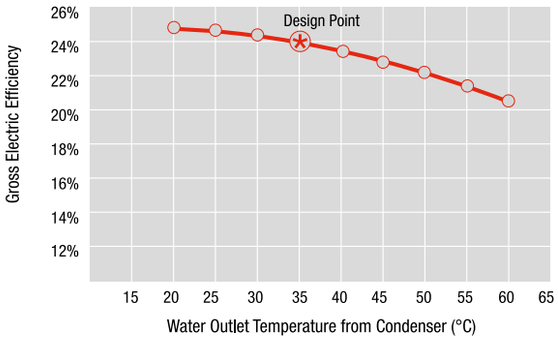

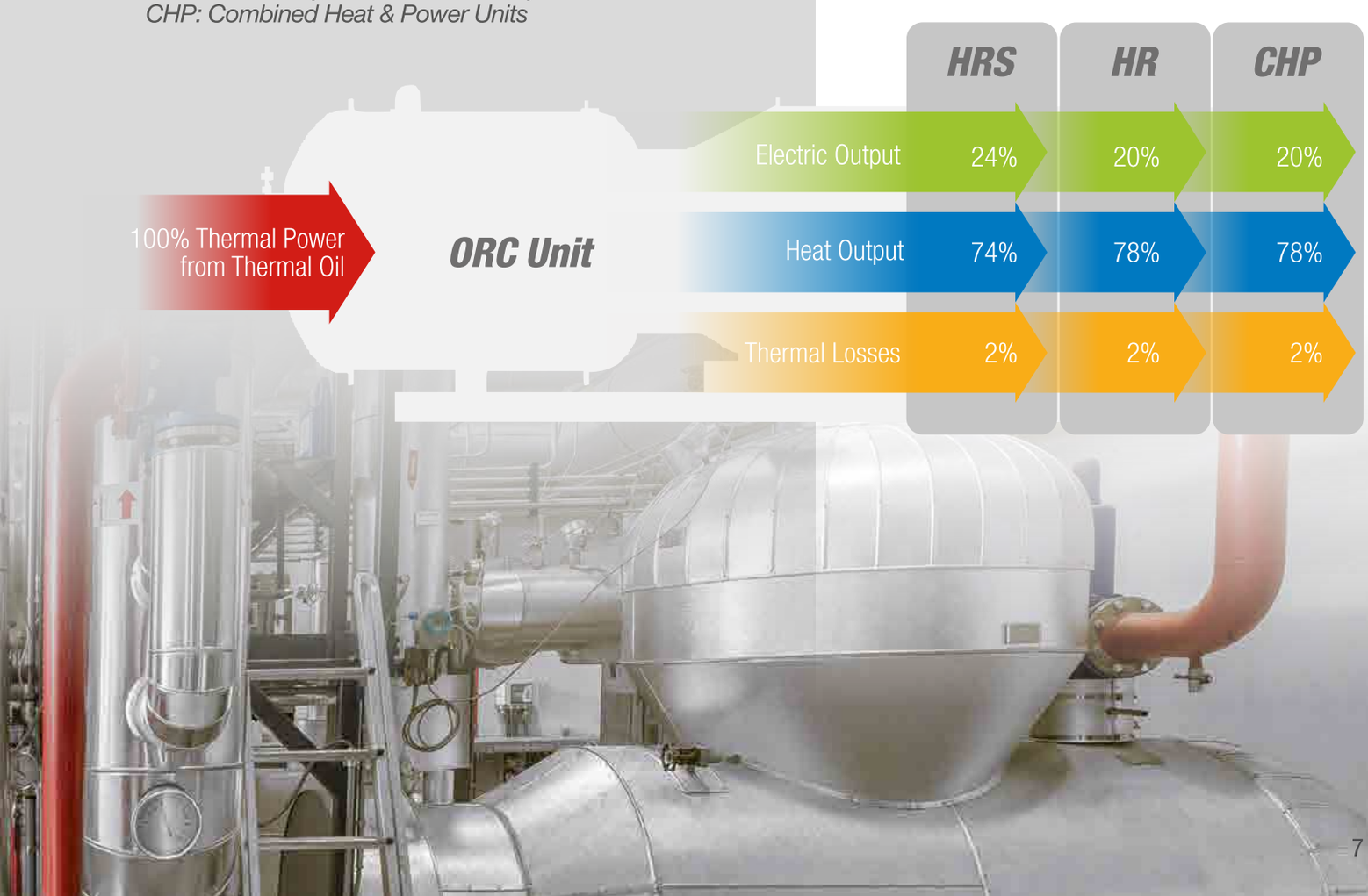

Geothermal Applications

ORC Turbogenerators for Geothermal Heat Sources

Organic Rankine Cycle (ORC) turbogenerators are designed to generate electric power efficiently from medium-to-low-enthalpy geothermal sources with water temperatures typically ranging between 100 °C and 200 °C (212 °F and 392 °F).
Turboden ORC units offer an excellent solution for newly discovered geothermal resources or bottoming of existing flash steam facilities.

Key Features and Benefits

- Hot water resource typically between 100 °C and 200 °C (212 °F and 392 °F)
- Sizes up to 15 MWe
- Scalable for larger plants
- High cycle efficiency
- Enhanced cycle efficiency with two-level cycles
- Low O&M requirements
- Wide range of working fluids can be used
- Simple and unattended operation
- EPC capability*
- Brine and steam bottoming cycles to flash steam plants

* Depending on the country

"Due to the relatively low vapor point and noncorrosive properties of the organic working fluid, the turbine operates under lower pressures, lower peripheral speeds and no erosion of turbine blades."

Thermodynamic Principle: The ORC Cycle

The turbogenerator uses the geothermal water to preheat and vaporize a suitable organic working fluid in the evaporator (2>3>4). The organic fluid vapor powers the turbine (4>5) that is coupled to the electric generator through an elastic coupling.
The vapor is then condensed in the condenser, cooled by water or air (5>1).
The organic fluid liquid is finally pumped (1>2) to the preheater and evaporator, thus completing the sequence of operations in the closed-loop circuit.

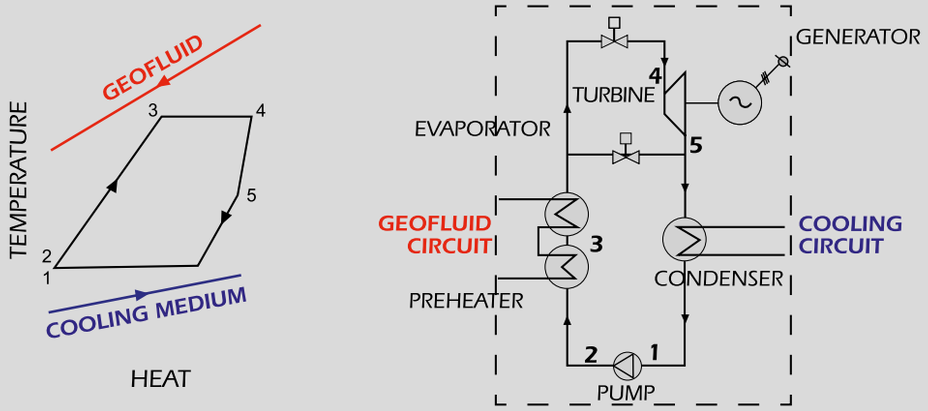

Example of ORC Plant in Geothermal Applications

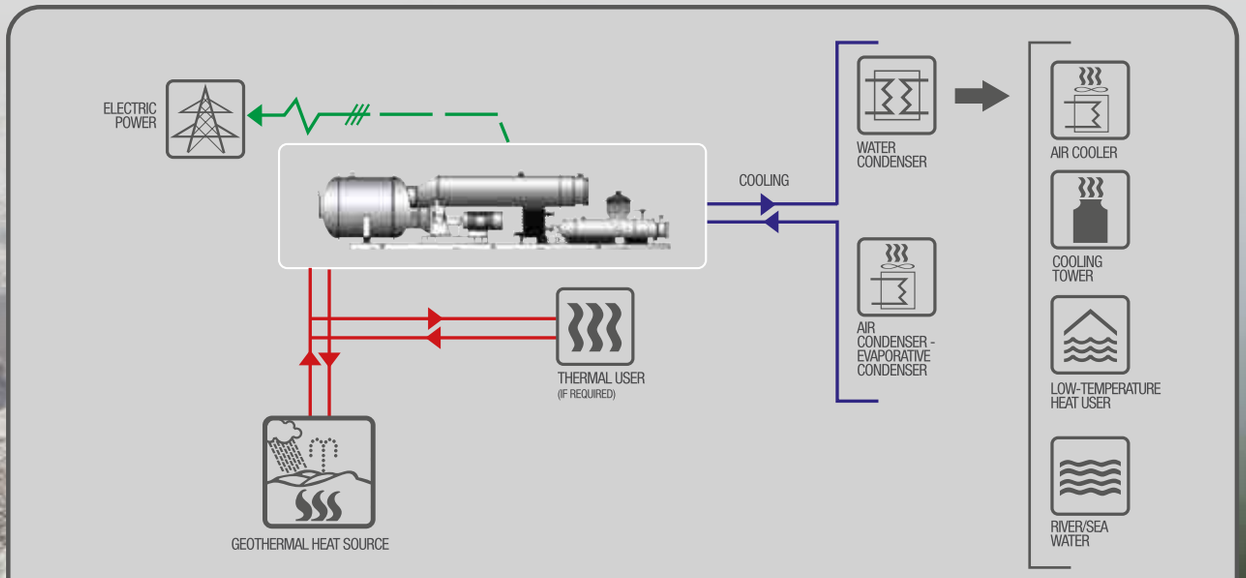

No standard heat/cooling sources. Highly customized solutions.

Heat Recovery Applications

Turboden ORC units produce electricity by recovering heat from industrial processes, reciprocating engines and gas turbines.
The electric power range in heat recovery applications is generally from 200 kW to 15 MW.
Capable of utilizing a wide range of temperatures, an ORC power plant produces reliable electricity from a variety of heat sources.
Key advantages Turboden ORC units deliver are their ease of integration into the industrial process - even with inconstant heat sources - and complete automation, leaving the industrial user focused on its own production process.

Typical Applications

	Gas	Liquid	Steam/ Vapor
Cement	•		
Glass	•		
Oil&Gas	•	•	•
Chemicals	•	•	•
Steel / Nonferrous	•	•	•
Pulp & Paper			•
Food		•	•
Waste Treatment	•	•	•
Thermal Oxidizers	•		
Power Generation	•	•	•

"Turboden ORC units can recover energy from relatively low- to moderate-temperature heat sources with excellent efficiency. HR units offer up to 20% efficiency and HRS units up to 26% efficiency. In gas turbine/engine heat recovery applications, the overall efficiency of the combined system can be significantly increased."

Main Reference Installations

Application Field	Reference Projects
Reciprocating Engines	Many reference projects for heat recovery from gas and diesel engines with ORC power output fro 0.5 MW up to 4.3 MW
Gas Turbines	Reference projects for heat recovery from gas turbine (e.g. in gas compressor stations)
Oil&Gas	Reference projects for heat recovery from flare gas & gas compressor stations
Steel & Other Non-Ferrous Metals	Reference projects for heat recovery from EAF (3 MW in Germany and 2.2 MW in Italy), from rolling mill reheating furnace (0.7 MW in Singapore), from aluminum industry (1.7 MW in Germany) and from cast iron cupola furnace (0.7 MW in Italy)
Cement & Refractory	Few reference projects: a 1 MW unit in Austria, a 2 MW unit in Morocco, a 4.3 MW and a 3.8 MW units in Romania and a 5.5 MW unit in Slovakia
Glass	Reference projects: a 1.3 MW and 0.5 MW units in Italy
Waste to Energy	Few reference projects: one in Belgium (3 MW), two in Italy (0.5 MW each), one in the USA (1 MW), two in Turkey (5.3 MW each), two in France (2.7 MW and 0.7 MW) and one in Finland (1.3 MW)

Example of Heat Recovery Plants

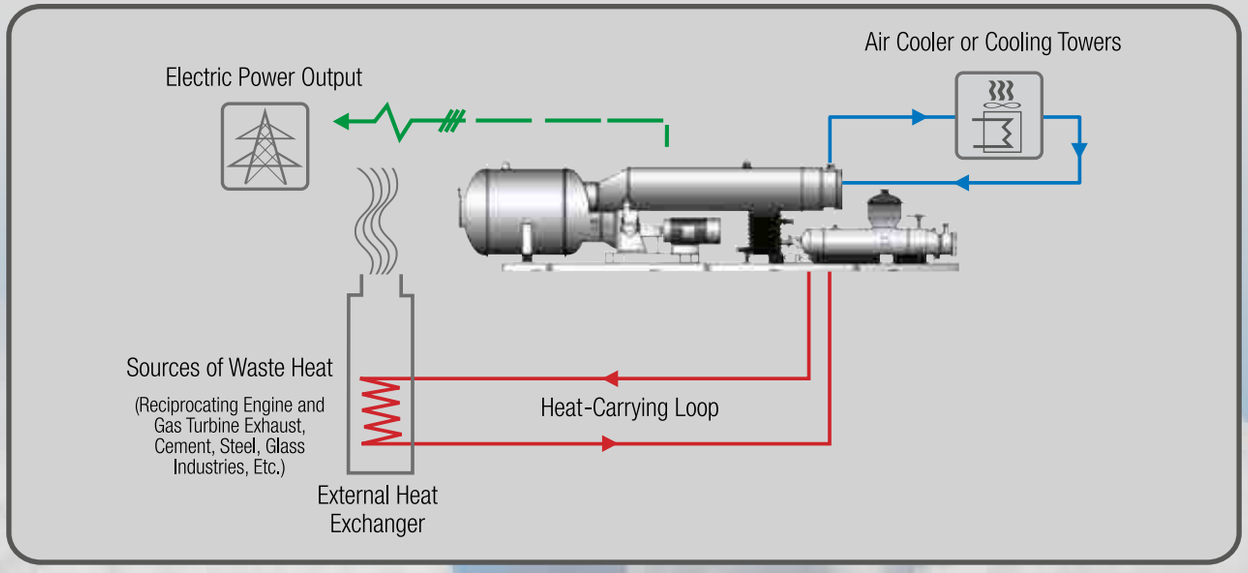

Biomass Applications

Biomass is an extremely important renewable energy source, available nearly everywhere. It can be stored for a long time and is often economically viable. Biomass is best utilized in combined heat and power plants, particularly when the power system is built near the heat consumer.

CHP Units for Cogeneration from Biomass

Cogeneration plants with Organic Rankine Cycle (ORC) products produce both heat and electric power from biomass efficiently and in a user-friendly manner. The generated power ranges between 200 kW and 15 MW. ORC split systems allow maximization of electric power production for a given biomass consumption due to a more efficient utilization of thermal power from the boiler, while nonsplit systems maximize electrical efficiency. ORC units can be fed by thermal oil, saturated vapor or superheated water.

HRS Units for Electricity Generation from Biomass

Turboden has developed new models of HRS ORC units capable of high electrical efficiency. HRS models can operate both in dissipative condition, maximizing the electrical output, and in cogeneration mode, with the ability to provide heat with a water temperature up to 60 °C (140 °F) while adjusting for seasonal thermal load and maximizing the utilization of the biomass. The ORC units can be fed by thermal oil or saturated vapor. Sizes range from 200 kW to 15 MW for a single unit.

Applications

- District heating networks
- Timber drying in sawmills
- Sawdust drying in wood pellet factories
- Air preheating in MDF factories
- Greenhouses, swimming pools, hot springs
- Refrigeration

Fuels

- Wood biomass: sawdust, wood chips, bark, treated wood
- Other biomass: dried sewage sludge, straw, green cuttings, rice husks, etc.
- Waste material

Example of a CHP ORC in Biomass Applications

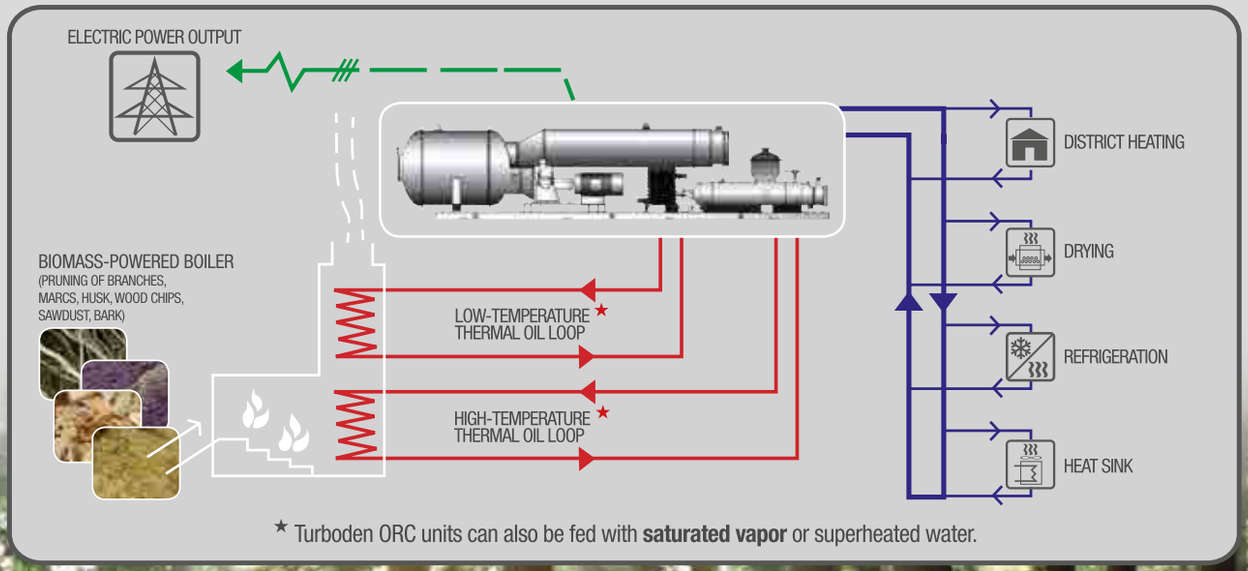

★ Turboden ORC units can also be fed with **saturated vapor** or superheated water.

Solar Thermal Applications

ORC Units for Electric Power Generation from Solar Energy

ORC units convert the heat collected by solar concentrators into electricity through an efficient thermodynamic cycle. Concentrating Solar Power (CSP) systems along with our Organic Rankine Cycle units improve cost-effectiveness of power-generation systems in the range between 200 kW and 15 MW electric.

Key Features and Benefits

- High flexibility
- Lower operating temperatures
- Lower solar collector costs
- Higher solar collector performance
- Scalable for larger plants
- Use of low-cost, nonhazardous heat carrier fluid both in the collector field and in energy storage systems
- Simple and unattended operation
- Reduced investment costs
- Simplified permit and authorization process

"ORC power plants can produce electricity without any fossil-fuel consumption, hence, without the production of any greenhouse gas, NOx, SOx, carbon monoxide or any other undesirable pollutant."

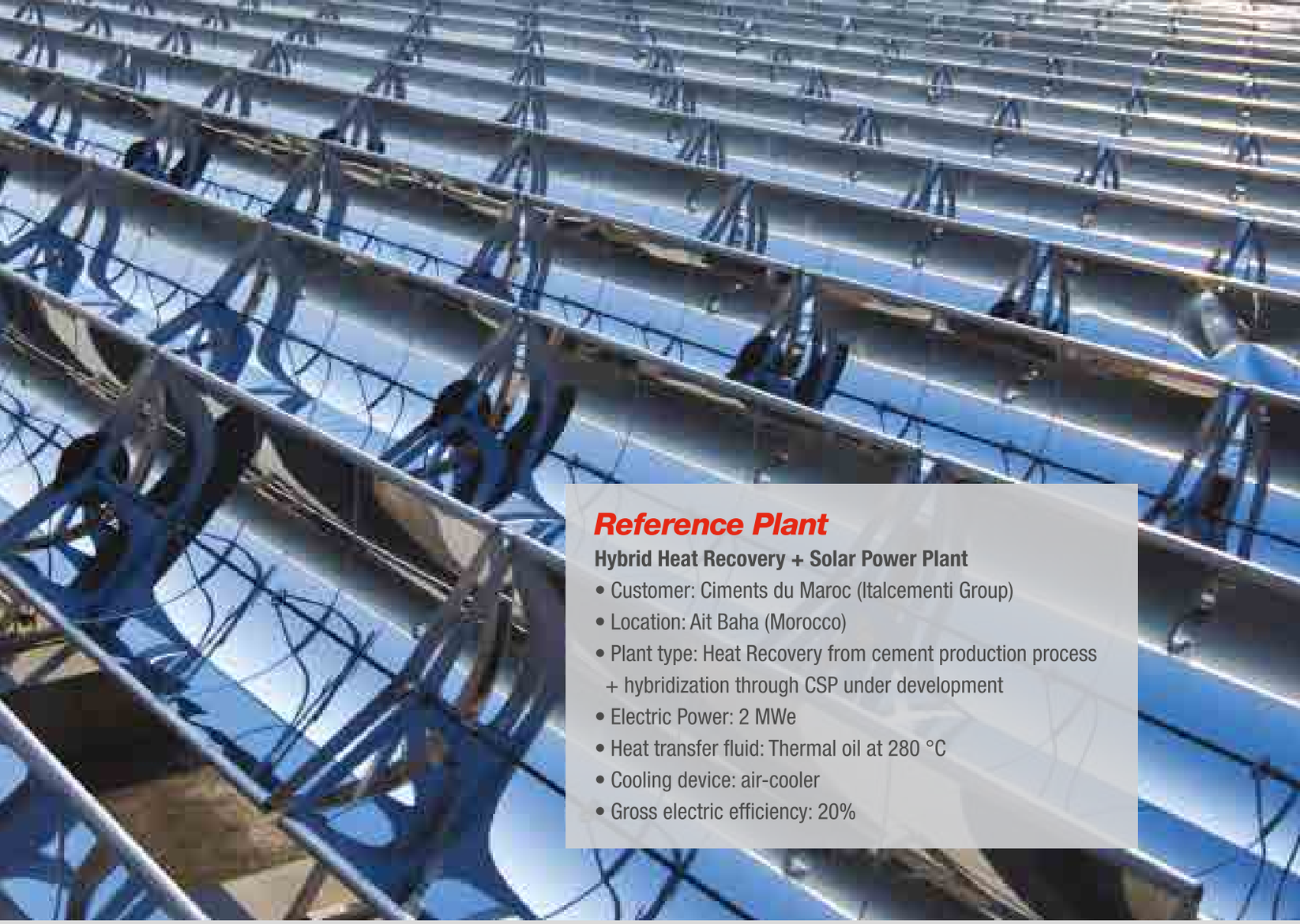

Reference Plant

Hybrid Heat Recovery + Solar Power Plant

- Customer: Ciments du Maroc (Italcementi Group)
- Location: Ait Baha (Morocco)
- Plant type: Heat Recovery from cement production process + hybridization through CSP under development
- Electric Power: 2 MWe
- Heat transfer fluid: Thermal oil at 280 °C
- Cooling device: air-cooler
- Gross electric efficiency: 20%

Example of ORC Solar Thermal Power Applications

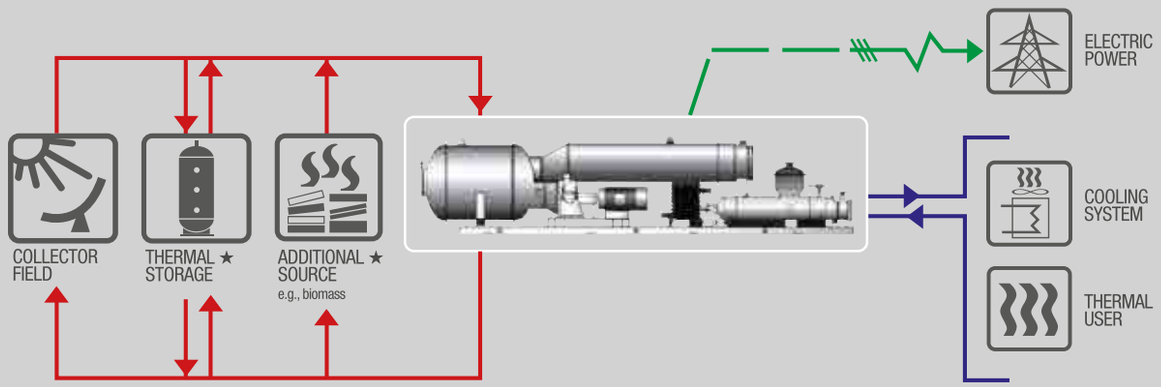

★ Optional per customer basis

The ORC power block uses an organic fluid to drive the turbine instead of traditional high-pressure steam. This results in a reliable, efficient and user-friendly solar thermal power plant.

Aftermarket Services

A Service Plan to Meet Your Needs

Turboden, a Mitsubishi Heavy Industries company, offers a complete portfolio of after-sale services that can be tailored to meet your needs, from simple planned maintenance to comprehensive service agreements.

The After-Sale Team can respond with remote monitoring services, site maintenance services, part repair, spare-part sales and plant revision to reduce operating risk and maximize customer asset value through peak power plant reliability and availability.

Turboden scope is to maximize customer value through the achievement of the maximum reliability of Turboden ORC plants.
Our customized systems provide capabilities for data trending and reporting, alerting the operator about power plant issues and performing advanced diagnostics and troubleshooting.
With our Technical Team, this all leads to rapid identification and resolution of issues to keep the power plant running at its best.

> ***"An ORC power plant is automatically controlled and does not require continuous operator presence. Typically, three to five hours of weekly operation and maintenance are required, primarily to validate operational parameters. The plant can be remotely monitored and does not divert significant manpower away from the mission of the enterprise."***

Turboden ORC plants in the world

AUSTRALIA	1
biomass	1
geothermal	
heat recovery	

AUSTRIA	31
biomass	29
geothermal	1
heat recovery	1

BELARUS	4
biomass	4
geothermal	
heat recovery	

BELGIUM	2
biomass	1
geothermal	
heat recovery	
waste to energy	1

BULGARIA	1
biomass	1
geothermal	
heat recovery	

CANADA	6
biomass	5
geothermal	
heat recovery	1

CROATIA	6
biomass	5
geothermal	1
heat recovery	

CZECH REP	3
biomass	3
geothermal	
heat recovery	

DENMARK	2
biomass	2
geothermal	
heat recovery	

ESTONIA	2
biomass	2
geothermal	
heat recovery	

FINLAND	3
biomass	2
geothermal	
heat recovery	
waste to energy	1

FRANCE	4
biomass	1
geothermal	1
heat recovery	
waste to energy	2

GERMANY	82
biomass	74
geothermal	4
heat recovery	4

GREECE	2
biomass	2
geothermal	
heat recovery	

INDONESIA	1
biomass	1
geothermal	
heat recovery	

ITALY	88
biomass	72
geothermal	1
heat recovery	10
waste to energy	2
solar thermal power	3

JAPAN	1
biomass	
geothermal	1
heat recovery	

LATVIA	15
biomass	15
geothermal	
heat recovery	

MOROCCO	1
biomass	
geothermal	
heat recovery	1*
solar thermal power	1*

NETHERLANDS	1
biomass	1
geothermal	
heat recovery	

POLAND	11
biomass	11
geothermal	
heat recovery	

ROMANIA	4
biomass	2
geothermal	
heat recovery	2

RUSSIA	6
biomass	4
geothermal	
heat recovery	2

SINGAPORE	1
biomass	
geothermal	
heat recovery	1

SLOVAKIA	2
biomass	1
geothermal	
heat recovery	1

SLOVENIA	1
biomass	1
geothermal	
heat recovery	

SPAIN	7
biomass	7
geothermal	
heat recovery	

SWEDEN	1
biomass	1
geothermal	
heat recovery	

SWITZERLAND	8
biomass	8
geothermal	
heat recovery	

THE PHILIPPINES	2
biomass	1
geothermal	1
heat recovery	

TURKEY	6
biomass	3
geothermal	1
heat recovery	
waste to energy	2

UNITED KINGDOM	8
biomass	7
geothermal	
heat recovery	1

U. S. AMERICA	2
biomass	1
geothermal	
heat recovery	
waste to energy	1

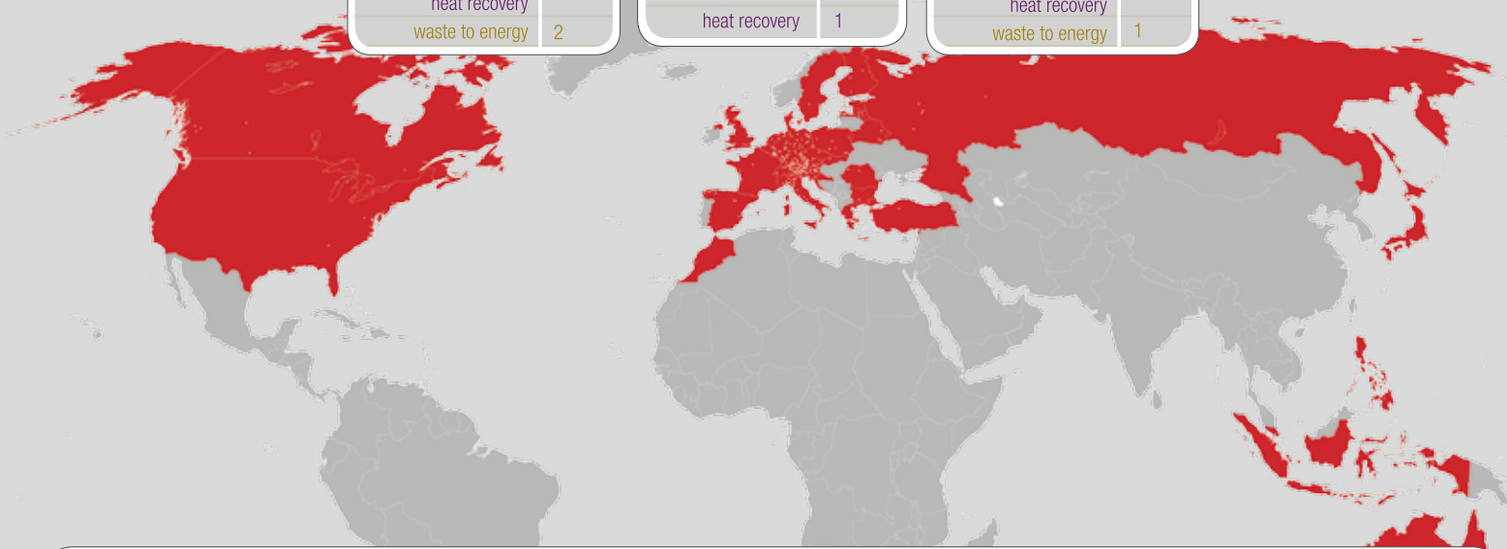

BIOMASS		GEOTHERMAL		HEAT RECOVERY		WASTE TO ENERGY		SOLAR	
in operation	226	in operation	6	in operation	19 *	in operation	9	in operation	
under construction	42	under construction	5	under construction	5	under construction		under construction	4*
TOTAL	268	TOTAL	11	TOTAL	24	TOTAL	9	TOTAL	4

TOTAL PLANTS	
in operation	260
under construction	56
TOTAL	316

Update October 2015

*Hybrid Heat Recovery and Solar Thermal Power plant

Turboden Heat Recovery (HR) Units - Typical Range of Operation and Performances

		TURBODEN 6/7 HR *DE*		TURBODEN 10 to 14 HR *DE*		TURBODEN 18 to 24 HR *DE*		TURBODEN 27 to 40 HR *DE*		TURBODEN 50 to 100 HR *DE*	
		Range of Operation	Reference Case TD 6 HR	Range of Operation	Reference Case TD 10 HR	Range of Operation	Reference Case TD 22 HR SPLIT	Range of Operation	Reference Case TD 40 HR SPLIT	Range of Operation	Reference Case TD 70 HR
INPUT* - Thermal Oil											
Thermal Oil inlet temperature	°C	240-300	270	240-310	290	240-310	285	250-315	315	240-310	290
Thermal Oil outlet temperature	°C	170-120	140	170-120	145	170-120	120	170-120	130	150-110	115
Thermal power input	MW	2.5-4.0	3.0	5.0-7.0	5.54	8.0-12.0	11.21	13.0-22.0	21.40	24.0-50.0	32.00
Thermal Oil inlet temperature	*°F*	*464-572*	*518*	*464-590*	*554*	*464-590*	*545*	*482-599*	*599*	*464-590*	*554*
Thermal Oil outlet temperature	*°F*	*338-248*	*284*	*338-248*	*293*	*338-248*	*248*	*338-248*	*266*	*302-230*	*239*
Thermal power input	*MMBtu/hr*	*8.53-13.65*	*10.24*	*17.06-23.88*	*18.90*	*27.30-40.95*	*38.25*	*44.36-75.07*	*73.02*	*81.89-170.61*	*109.00*
OUTPUT - Cooling Water**											
Typical cooling water temperature (in/out)	°C	25/35	25/35	25/35	26/38	25/40	22/40	20/45	22/54	25/40	20/27
Thermal power to condenser	MW	2.0-3.5	2.4	4.0-5.0	4.4	6.0-9.5	9.0	10.0-17.5	17.2	19.2-40.0	25.2
Typical cooling water temperature (in/out)	*°F*	*77/95*	*77/95*	*77/95*	*79/100*	*77/104*	*72/104*	*68/113*	*72/129*	*77/104*	*68/81*
Thermal power to condenser	*MMBtu/hr*	*6.82-11.94*	*8.19*	*13.65-17.06*	*15.01*	*20.47-32.42*	*30.71*	*34.12-59.71*	*58.69*	*65.51-136.49*	*86.00*
PERFORMANCES											
Gross electric power	kW	500-800	600	900-1600	1108	1700-2500	2120	2600-4500	4000	4800-10500	6800
Gross electric efficiency***		17%-20%	20%	17%-22%	20%	17%-22%	19%	17%-21%	19%	17%-22%	21%
Captive power consumption	kW	18-36	25	36-70	46	60-100	80	100-200	200	200-800	465
Net active electric power output	kW	480-760	575	850-1550	1062	1650-2400	2040	2500-4000	3800	4500-9800	6335
Net electric efficiency***		16%-19%	19%	16%-21%	19%	16%-21%	18%	16%-20%	18%	16%-21%	20%
Electric generator****		50Hz, 400V 60Hz, 480V	50Hz, 400V 60Hz, 480V	50Hz, 400V 60Hz, 480V	50Hz, 400V 60Hz, 480V	50Hz, 660V 60Hz, 4160V	50Hz, 660V 60Hz, 4160V	50Hz, 6kV 60Hz, 4160V	50Hz, 6kV 60Hz, 4160V	50Hz, 6kV 60Hz, 4160V	60Hz, 4160V
Cooling systems		closed loop water cooling or wet tower		closed loop water cooling or wet tower		closed loop water cooling or wet tower		closed loop water cooling or wet tower		wet tower or air condenser	
Typical delivery time (EXW)	Months	9-11		9-11		9-11		11-13		12-14	

* Turboden units up to TURBODEN 40 HR can be equipped with the “Split System”, a heat exchanger allowing additional low temperature heat recovery to increase the power production. The “Split System” heat exchager may use thermal oil / pressurized water as heat transfer fluid.

** Cooling water temperatures are selected keeping into account specific site requirements, e.g. average air temperaure, water availability (to use either dry or wet heat dissipation system), possibility of CHP mode (in this specific case water up to 90°C can be generated by the ORC).

*** Electric efficiency depends on several factors, primarely Heat and Cooling Source Temperatures and thermal media. Our sales specialists will support you to optimise the solutions, evaluating specific heat source features (thermal oil, steam, pressurized water, exhaust gas) and cooling devices (dry/wet water loops, CHP, air condensing).

**** Induction or synchronous, medium voltage available upon request. If reduction gear is required, electric power is reduced of about 1.5%.

DE: Available Direct Heat Exchange for direct heat recovery from internal combustion engines exhaust gas.

DISCLAIMER NOTE: Data provided herein are not binding and might change without prior notice.

Turboden High Efficiency (HRS) Units - Typical Sizes and Performances

		TURBODEN 12 HRS - 1MW		TURBODEN 12 HRS		TURBODEN 24 HRS		TURBODEN 32 HRS	
		with split*	without split	with split*	without split	with split*	without split	with split*	without split
INPUT - Thermal Oil									
Nominal temperature "HT" loop (in/out)	°C	305/209	305/204	305/210	305/206	310/215	310/212	310/215	310/214
Thermal power input "HT" loop	kW	3817	4043	4425	4817	8850	9634	12015	13075
Nominal temperature "LT" loop (in/out)	°C	209/130	-	210/130	-	215/135	-	215/135	-
Thermal power input "LT" loop	kW	338	-	392	-	784	-	1060	-
Overall thermal power input	kW	4155	4043	4817	4817	9634	9634	13075	13075
Nominal temperature "HT" loop (in/out)	*°F*	*581/408*	*581/399*	*581/410*	*581/403*	*419/275*	*-*	*419/275*	*-*
Thermal power input "HT" loop	*MMBtu/hr*	*13.02*	*13.08*	*15.09*	*16.44*	*30.17*	*32.87*	*40.01*	*44.61*
Nominal temperature "LT" loop (in/out)	*°F*	*408/266*	*-*	*410/266*	*-*	*419/275*	*-*	*419/275*	*-*
Thermal power input "LT" loop	*MMBtu/hr*	*1.15*	*-*	*1.34*	*-*	*2.68*	*-*	*3.62*	*-*
Overall thermal power input	*MMBtu/hr*	*14.18*	*13.80*	*16.44*	*16.44*	*32.87*	*32.87*	*44.61*	*44.61*
OUTPUT - Cooling Water									
Cooling water temperature (in/out)	°C	25/35	25/35	25/35	25/35	24/37	24/37	25/40	25/40
Thermal power to the cooling water circuit	kW	3151	3040	3662	3632	7256	7310	9977	9897
Cooling water temperature (in/out)	*°F*	*77/95*	*77/95*	*77/95*	*77/95*	*75/99*	*75/99*	*77/104*	*77/104*
Thermal power to the cooling water circuit	*MMBtu/hr*	*10.75*	*10.37*	*12.5*	*12.39*	*24.76*	*24.94*	*34.04*	*33.77*
PERFORMANCES									
Gross electric power	kW	1000	1000	1156	1188	2277	2340	3109	3193
Gross electric efficiency		24.1%	24.7%	24.0%	24.7%	23.6%	24.2%	23.8%	24.4%
Captive power consumption	kW	36	36	46	49	94	96	119	125
Net active electric power output	kW	964	964	1110	1139	2183	2244	2990	3067
Net electric efficiency		23.2%	23.8%	23.0%	23.6%	22.7%	23.3%	22.9%	23.5%
Electric generator**		50Hz, 400V 60Hz, 480V	50Hz, 400V 60Hz, 480V	50Hz, 400V 60Hz, 480V	50Hz, 400V 60Hz, 480V	50Hz, 660V 60Hz, 4160V	50Hz, 660V 60Hz, 4160V	50Hz, 6kV 60Hz, 4160V	50Hz, 6kV 60Hz, 4160V
Plant size		Multiple skid	Multiple skid	Multiple skid	Multiple skid	Multiple skid	Multiple skid	Multiple skid	Multiple skid
Biomass consumption***	kg/h	1816	1944	2105	2316	4211	4632	5715	6286
Net solar collector surface****	m^2	-	10000-13000	-	13000	-	24000	-	33000
Typical delivery time (EXW)	Months	9-11	9-11	9-11	9-11	9-11	9-11	11-13	11-13

* The Turboden split system allows maximisation of electric power production for a given biomass consumption.

** Induction or synchronous, medium voltage available upon request. If reduction gear is required, electric power is reduced of about 1.5%.

*** Assuming a low heating value of biomass = 2.6 kWh/kg and boiler efficiency = 0.88 in case of ORC with split, = 0.80 in case of ORC without split. The thermal oil boiler is not included in the Turboden scope of supply.

**** Assuming design solar radiation = 800 W/m2, design solar collector efficiency = 0.6 and solar multiple = 1.2.
The Solar field is not included in the Turboden scope of supply.

For heat recovery applications direct heat exchange can be available.

DISCLAIMER NOTE: Data provided herein are not binding and might change without prior notice.

Turboden High Efficiency (HRS) Units - Typical Sizes and Performances

		TURBODEN 50-110 HRS	TURBODEN 55 HRS	TURBODEN 65 HRS	TURBODEN 110 HRS
		Range of Operation	Range Case	Range Case	Range Case
INPUT - Thermal Oil					
Thermal Oil inlet temperature	°C	300 - 320	315	315	315
Thermal Oil outlet temperature	°C	170 - 200	190	190	180
Overall thermal power input	kW	18000 - 40000	20000	25380	40023
Thermal Oil inlet temperature	*°F*	*572 - 608*	*599*	*599*	*599*
Thermal Oil outlet temperature	*°F*	*356 - 392*	*374*	*374*	*354*
Overall thermal power input	*MMBtu/hr*	*61.4 - 136.5*	*68.3*	*86.6*	*134.9*
OUTPUT - Cooling System (1)					
Cooling source		water / air	water	water	water
Design cooling system temperature (2)	°C	0 - 40	25/35	24/34	25/35
Thermal power to the cooling system	kW	13000 - 30000	14911	19376	29750
Design cooling system temperature (2)	*°F*	*32 - 104*	*77/95*	*75/93*	*77/95*
Thermal power to the cooling system	*MMBtu/hr*	*44.4 - 102.4*	*48.6*	*64.7*	*97.7*
PERFORMANCES					
Gross electric power	kW	4500 - 11000	5286	6348	10512
Gross electric efficiency		23 - 27%	26.4%	25.0%	26.3%
Captive power consumption (3)	kW	180 - 500	212	348	512
Net active electric power output	kW	4500 - 10000	5074	6000	10000
Net electric efficiency (4)		22 - 26%	25.4%	23.6%	25.0%
Electric generator		50Hz/60Hz, MV	50Hz, 6kV	60Hz, 4160V	50Hz, 6kV
Biomass consumption (5)	kg/h	9000 - 20000	9610	12200	19010
Net solar collector surface (6)	m^2	45000 - 100000	50000	63500	98900
Typical delivery time (EXW) (7)	Months	10 - 15	10 - 15	10 - 15	10 - 15

(1) Cooling water/air temperatures are selected considering specific site requirements, e.g. average air temperature, water availability (to use either dry or wet heat dissipation system), possibility of CHP mode (with hot water generation at ORC condenser).

(2) IN/OUT water temperatures for water cooling.

(3) Including working fluid pump and auxiliaries consumptions. Excluding heat dissipation system and thermal oil circulation consumptions.

(4) Electric efficiency depends on several factors, primarely Heat and Cooling Source Temperatures and thermal media. Our sales specialists will support you to optimise the solutions, evaluating specific heat source features (thermal oil, steam, pressurized water, exhaust gas) and cooling devices (dry/wet water loops, CHP, air condensing).

(5) Assuming a low heating value of biomass = 2.6 kWh/kg and boiler efficiency = 0.80. The thermal oil boiler is not included in the Turboden scope of supply.

(6) Assuming design solar radiation = 800 W/m2, design solar collector efficiency = 0.6 and solar multiple = 1.2.
The Solar field is not included in the Turboden scope of supply.

(7) Delivery time is defined at the moment of order considering specific project features (e.g. customer standards) and Turboden production load at the moment of order.

For heat recovery applications direct heat exchange can be available.

DISCLAIMER NOTE: Data provided herein are not binding and might change without prior notice.

Turboden Combined Heat & Power (CHP) Units - Typical Sizes and Performances

		TURBODEN 6 CHP	TURBODEN 7 CHP	TURBODEN 10 CHP	TURBODEN 14 CHP	TURBODEN 18 CHP	TURBODEN 22 CHP	TURBODEN 30 CHP
INPUT - Thermal Oil								
Nominal temperature "HT" loop (in/out)	°C	302/242	302/242	300/240	300/240	300/240	300/240	310/231
Overall thermal power input	kW	3340	3895	5140	6715	9790	12020	17571
Nominal temperature "HT" loop (in/out)	*°F*	*576/468*	*576/468*	*572/464*	*572/464*	*572/464*	*572/464*	*590/448*
Overall thermal power input	*MMBtu/hr*	*11.4*	*13.29*	*17.54*	*22.91*	*33.4*	*41.01*	*59.95*
OUTPUT - Hot Water								
Hot water temperature (in/out)	°C	60/80	60/80	60/80	60/80	60/90	60/90	65/95
Thermal power to hot water circuit	kW	2664	3117	4081	5313	7834	9601	14499
Hot water temperature (in/out)	*°F*	*140/176*	*140/176*	*140/176*	*140/176*	*140/194*	*140/194*	*149/203*
Thermal power to hot water circuit	*MMBtu/hr*	*9.09*	*10.64*	*13.92*	*18.13*	*26.73*	*32.76*	*49.47*
PERFORMANCES								
Gross active electric power	kW	643	739	1016	1339	1863	2304	3143
Gross electric efficiency		19.3%	19.0%	19.8%	19.9%	19.0%	19.2%	17.9%
Captive power consumption	kW	32	37	48	58	79	97	197
Net active electric power	kW	611	702	968	1281	1784	2207	2946
Net electric efficiency		18.3%	18.0%	18.8%	19.1%	18.2%	18.4%	16.8%
Electric generator*		50Hz, 400V	50Hz, 400V	50Hz, 400V 60Hz, 480V	50Hz, 400V	50Hz, 660V 60Hz, 4160V	50Hz, 660V 60Hz, 4160V	50Hz, 6kV 60Hz, 4160V
Plant size		Single Skid	Single Skid	Multiple Skid	Multiple Skid	Multiple Skid	Multiple Skid	Multiple Skid
Biomass consumption**	kg/h	1606	1873	2471	3228	4707	5779	8448
Typical delivery time (EXW)	Months	9-11	9-11	9-11	9-11	9-11	9-11	11-13

* Induction or synchronous, medium voltage available upon request. If reduction gear is required, electric power is reduced of about 1.5%.

**Assuming a low heating value of biomass = 2.6 kWh/kg and boiler efficiency = 0.80.
The thermal oil boiler is not included in the Turboden scope of supply.

DISCLAIMER NOTE: Data provided herein are not binding and might change without prior notice.

Turboden Combined Heat & Power (CHP) Units WITH SPLIT* - Typical Sizes and Performances

		TURBODEN 6 CHP	TURBODEN 7 CHP	TURBODEN 10 CHP	TURBODEN 14 CHP	TURBODEN 18 CHP	TURBODEN 22 CHP	TURBODEN 26 CHP	TURBODEN 28 CHP
INPUT - Thermal Oil									
Nominal temperature "HT" loop (in/out)	°C	312/252	312/252	310/250	310/250	312/252	309/249	310/250	310/245
Thermal power input "HT" loop	kW	3056	3572	4685	6130	8935	10975	12948	14302
Nominal temperature "LT" loop (in/out)	°C	252/132	252/132	250/130	250/130	252/132	249/130	250/135	245/130
Thermal power input "LT" loop	kW	283	338	450	585	855	1045	1223	1386
Overall thermal power input	kW	3339	3910	5135	6715	9790	12020	14171	15688
Nominal temperature "HT" loop (in/out)	*°F*	*594/486*	*594/486*	*590/482*	*590/482*	*594/486*	*588/480*	*590/482*	*590/473*
Thermal power input "HT" loop	*MMBtu/hr*	*10.43*	*12.19*	*15.99*	*20.92*	*30.49*	*37.45*	*44.15*	*48.76*
Nominal temperature "LT" loop (in/out)	*°F*	*486/270*	*486/270*	*482/266*	*482/266*	*486/270*	*480/266*	*482/273*	*473/266*
Thermal power input "LT" loop	*MMBtu/hr*	*0.96*	*1.15*	*1.54*	*2.00*	*2.92*	*3.57*	*4.17*	*4.73*
Overall thermal power input	*MMBtu/hr*	*11.06*	*13.02*	*17.52*	*22.91*	*33.41*	*41.01*	*48.37*	*53.53*
OUTPUT - Hot Water									
Hot water temperature (in/out)	°C	60/80	60/80	60/80	60/80	60/90	60/90	60/90	61/91
Thermal power to hot water circuit	kW	2689	3146	4095	5341	7843	9598	11589	12908
Hot water temperature (in/out)	*°F*	*140/176*	*140/176*	*140/176*	*140/176*	*140/194*	*140/194*	*140/194*	*142/196*
Thermal power to hot water circuit	*MMBtu/hr*	*9.18*	*10.73*	*13.97*	*18.22*	*26.76*	*32.75*	*39.51*	*44.04*
PERFORMANCES									
Gross active electric power	kW	619	729	1000	1317	1862	2319	2632	2833
Gross electric efficiency		18.5%	18.6%	19.5%	19.6%	19.0%	19.3%	18.6%	18.1%
Captive power consumption	kW	32	40	51	62	87	98	155	166
Net active electric power	kW	587	689	949	1255	1775	2221	2476	2667
Net electric efficiency		17.6%	17.6%	18.5%	18.7%	18.1%	18.5%	17.5%	17.0%
Electric generator**		50Hz, 400V	50Hz, 400V	50Hz, 400V 60Hz, 480V	50Hz, 400V	50Hz, 660V 60Hz, 4160V	50Hz, 660V 60Hz, 4160V	50Hz, 6kV 60Hz, 4160V	50Hz, 6kV 60Hz, 4160V
Plant size		Single Skid	Single Skid	Multiple Skid	Multiple Skid	Multiple Skid	Multiple Skid	Multiple Skid	Multiple Skid
Biomass consumption***	kg/h	1459	1709	2244	2935	4279	5253	6194	6857
Typical delivery time (EXW)	Months	9-11	9-11	9-11	9-11	9-11	9-11	11-13	11-13

* The Turboden split system allows maximisation of electric power production for a given biomass consumption.

** Induction or synchronous, medium voltage available upon request. If reduction gear is required, electric power is reduced of about 1.5%.

***Assuming a low heating value of biomass = 2.6 kWh/kg and boiler efficiency = 0.88.
The thermal oil boiler is not included in the Turboden scope of supply.

DISCLAIMER NOTE: Data provided herein are not binding and might change without prior notice.

Turboden 200/300 kW Units - Typical Performances

		TURBODEN 2 Dual mode*		TURBODEN 3 Dual mode*		TURBODEN 3 CHP	
THERMAL INPUT		Saturated steam ~16 bar(a)	Saturated steam ~26 bar(a)	Saturated steam ~23 bar(a)	Saturated steam ~30 bar(a)	Thermal Oil	
		Max electric efficiency mode	**CHP mode**	**Max electric efficiency mode**	**CHP mode**	**80 °C water output**	**90 °C water output**
Saturated steam / Thermal Oil inlet temperature "HT" Loop (in)	°C	200	226	220	234	310	310
Water condensate / Thermal Oil outlet temperature "HT" Loop (out)	°C	181	209	201	216	221	227
Overall thermal power input	kW	1234	1624	1708	1971	1817	1835
Heat source flow rate**	t/h	2.2	3.1	3.2	3.8	30.2	32.4
Saturated steam / Thermal Oil inlet temperature "HT" Loop (in)	*°F*	*392*	*439*	*428*	*453*	*590*	*590*
Water condensate / Thermal Oil outlet temperature "HT" Loop (out)	*°F*	*358*	*408*	*394*	*421*	*437*	*441*
Overall thermal power input	*MMBtu/hr*	*4.21*	*5.54*	*5.83*	*6.73*	*6.21*	*6.26*
*Heat source flow rate***	*lb/min*	*81*	*114*	*118*	*140*	*309*	*331*
THERMAL OUTPUT - Hot water							
Hot water temperature (in/out)	°C	35/55	75/95	35/55	55/75	60/80	75/90
Thermal power to the cooling water circuit	kW	1002	1402	1380	1647	1491	1505
Hot water temperature (in/out)	*°F*	*95/131*	*167/203*	*95/131*	*131/167*	*140/176*	*167/194*
Thermal power to the cooling water circuit	*MMBtu/hr*	*3.42*	*4.78*	*4.71*	*5.62*	*5.09*	*5.13*
PERFORMANCES							
Gross active electric power	kW	200	200	300	300	300	300
Captive consumption	kW	12	22	18	26	20	23
Net active electric power	kW	188	178	282	274	280	277
Gross electric efficiency	%	16.2	12.3	17.5	15.5	16.5	16.3
Electric generator		Asynchr.; 400V; 50Hz	Asynchr.; 400V; 50Hz	Asynchr.; 400V; 50Hz	Asynchr.; 400V; 50Hz	Asynchr.; 400V; 50Hz	Asynchr.; 400V; 50Hz
Biomass consumption***	Kg/h	558	735	775	880	825	830
Typical delivery time (EXW)	Months	9	9	9	9	9	9

* Dual mode: the same ORC module (fed with saturated steam) can be operated either in "max electric efficiency" mode or in "CHP" mode.

** In case of thermal oil the flow rate was calculated assuming "Therminol 66" properties.

*** Assuming a low heating value of biomass = 2.6 kWh/kg and a boiler efficiency = 0.85.

DISCLAIMER NOTE: Data provided herein are not binding and might change without prior notice.

12-COM.B-rev.6 (10/2015)

clean energy ahead
TURBODEN®
a group company of MITSUBISHI HEAVY INDUSTRIES, LTD.

MITSUBISHI HEAVY INDUSTRIES, LTD.

seijiro yazawa iwai

DIVISIÓN DE EQUIPOS E INFRAESTRUCTURA PARA SERVICIOS DE ENERGÍA ELÉCTRICA

www.seijiroyazawaiwai.com
info@seijiroyazawaiwai.com